GEMINI
8-M Telescopes
Project

ICD-G0014

Gemini Observatory
Optomechanical Coordinate Systems

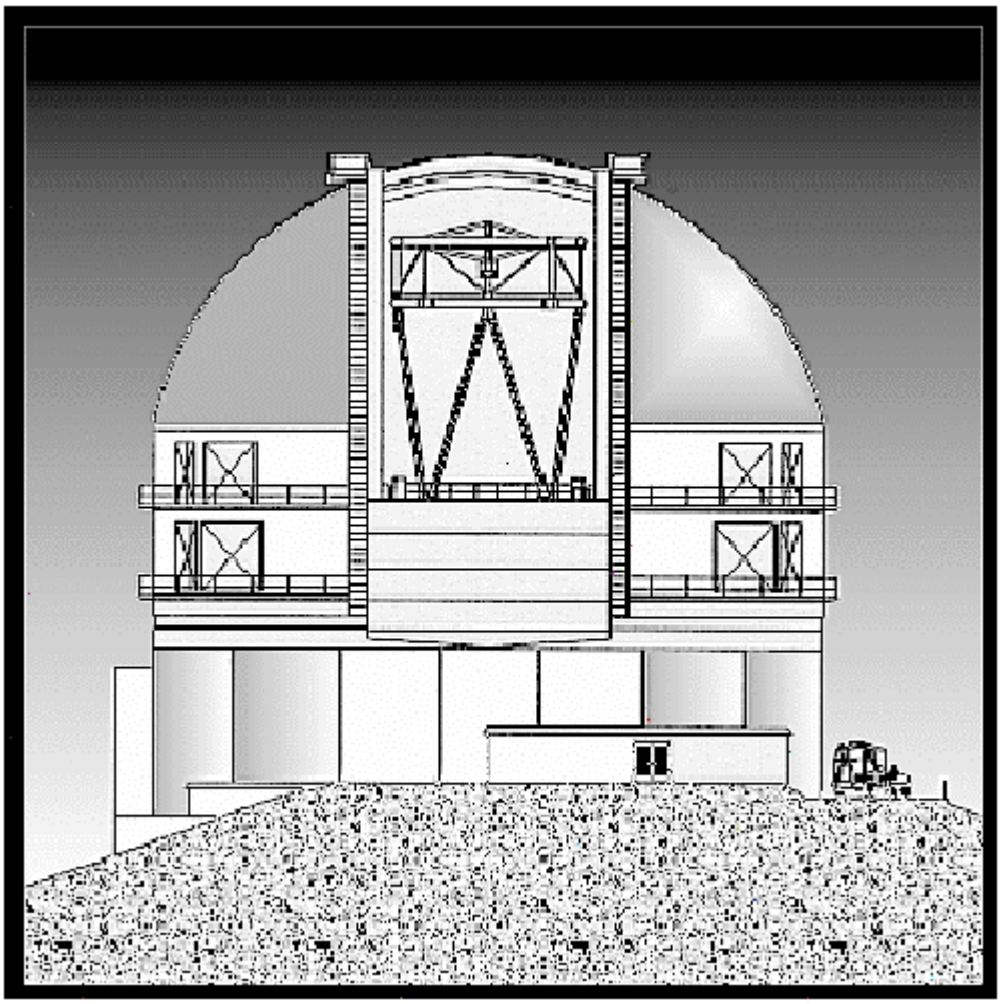

J. Oschmann
Systems Engineering

January 7, 1997

GEMINI PROJECT OFFICE 950 N. Cherry Ave. Tucson, Arizona 85719
Phone: (520) 318-8545 Fax: (520) 318-8590

ICD-G0004

Revision Control Descriptions

Revision: Original release
Date: January 7, 1997
Approved: J. Oschmann
Description:

Revision: Updated release
Date: September 8, 2011
Approved: B. Walls
Description: Minor Corrections

1.0 Introduction

This document defines the coordinate systems used on the Gemini telescopes and the relationships between them. This includes the pier co-ordinate system, mount co-ordinate system, optical support structure co-ordinate system , cassegrain rotator co-ordinate system and the ISS instrument port co-ordinate system.. It does not cover the more global astronomical coordinate reference frame which is described within the Telescope Control System design documentation. Instrument builders should pay particular attention to section 3.5 below.

2.0 References

Documents:

1. *"Gemini Pointing Algorithms" by P.T. Wallace, Document TCS/PTW/3.7 (TN-PS-G0044)*
2. TBD by P.T. Wallace, Document TBD (describes science instrument to astronomical coordinate frame) (TN-PS-G0045).

Drawings:

1. 90-GP-0000-0006 Instrument and Instrument Support Structure coordinate system
2. 90-GP-0001-0022 Telescope mount coordinate system
3. 90-GP-0001-0023 Optical support structure coordinate system
4. 90-GP-0001-0024 Cassegrain & Pier coordinate system
5. 89-GP-1000-0003 Cassegrain Rotator co-ordinate system

3.0 Overview

The following sections describe the coordinate systems used at various major interfaces and sub-assemblies throughout the telescope system. When the telescope is in its nominal park position (facing east, Zenith pointing, Cassegrain rotator in the mid range of its travel), the pier, telescope mount, optical support structure, cassegrain rotator and instrument port 1 co-ordinate systems line up and are self consistent with each other with only a shift along their local Z axis required to go from one to another. The coordinate systems for side looking instrument mounting ports are defined with respect to the cassegrain rotator co-ordinate system. For each, the +Z axis is oriented towards the light source, reflected by the science fold in the A&G . In the parked position described above, the +Y axis is pointing in the sane direction as the other co-ordinate axes +Z. This is explained in 3.5, but it does leave one local coordinate system from an instrument perspective which is independent of the mounting face.

All systems are right handed Cartesian coordinates.

Relating the final instrument coordinate system to astronomical terms is covered in reference document two above and is not dealt with further here.

3.1 Pier coordinate system

The pier coordinate system is shown in drawing 90-GP-0001-0024. This is consistent with the mount coordinate system with the origin located at the intersection of the finish floor level and the azimuth rotation axis. X axis is North, Y is West, and Z is "up", opposite the nominal gravity vector. Note that the directions such as "North" are relative to "True" North.

3.2 Telescope mount coordinate system

The telescope mount coordinate system is shown in drawing 90-GP-0001-0022. The origin is at the intersection of the azimuth axis and the top surface of the azimuth track. The positive X axis point to true North, the positive Y axis points due West, and the positive Z axis point up towards zenith (opposite the gravity vector). Note the park position of the telescope is with an azimuth angle of 90 degrees, which puts the telescope east pointing. This park position is the mid-range of travel of the azimuth axis. The drawing shows the telescope in this park position.

Relative to the Pier Coordinate System origin $(x_p, y_p, z_p) = (0,0,0)$, the Mount Coordinate System origin $(x_m, y_m, z_m) = (0,0,0)$ is $(x_p, y_p, z_p) = (0,0, 11445)$. The z_p axis is parallel and in the same sense as the z_m axis. When azimuth angle = 0, then the y_p axis is parallel and in the same sense as the y_m axis. A positive azimuth angle "A" rotates the Mount Coordinate System about the z_p axis in a negative sense.

3.3 Optical support structure (OSS) coordinate system

The Optical Support Structure, which is the main body of the telescope holding the primary (M1) and secondary (M2) mirrors and such, has a local coordinate system as shown in drawing 90-GP-0001-0023. When in Park, the coordinate system is consistent with the telescope mount coordinate system described in 3.2 with the exception that the origin is located at the intersection of the azimuth and elevation axis of the telescope. This is accomplished by movement of the origin for the mount along its Z axis in a positive direction to the intersection of the elevation axis.

As the telescope is pointed off-zenith towards an elevation angle of zero (horizon pointing), the positive Y axis points up (to zenith for a horizon pointing telescope). The Z axis then points towards the horizon in the direction of the telescope pointing as the telescope moves toward horizon pointing (elevation angle of zero). The local Z axis always points towards the source of light, rather than following the direction of travel of light through the system. Note that the elevation angle (E) is defined relative to the horizon (Zero is horizon pointing) and the Zenith angle is defined as relative to zenith pointing (zero is zenith pointing). This is shown in the reference drawing.

This provides the local coordinates used by the M1 assembly, M2 assembly and any other items mounted to the Optical Support Structure. The Cassegrain rotator and instruments are mounted to the underside of the M1 assembly. Specific local coordinate systems for these areas are covered in the following sections (3.4 and 3.5).

Relative to the Mount Coordinate System origin (x_m, y_m, z_m) = (0,0,0), the Optical Support Structure Coordinate System origin (x_0, y_0, z_0) =(0,0,0) is (x_m, y_m, z_m) = (0,0,8555). The x_0 axis is parallel and in the same sense as the x_m axis. When zenith angle = 0, then the y_0 axis is parallel and in the same sense as the y_m axis. A positive zenith angle rotates the Optical Support Structure Coordinate System about the x_0 axis in a positive sense.

3.4 Cassegrain Rotator coordinate system

The Cassegrain Rotator coordinate system is shown in drawing 90-GP-0001-0024, upper part of the drawing and drawing 89-GP-1000-0003. As with the OSS coordinate system, when the telescope is in the nominal east facing park position, Zenith pointing, and Cassegrain rotator in the mid range of its travel, the local coordinates are consistent with the mount coordinates with a shift along the Z axis of the origin. The local origin here lies at the intersection of the Cassegrain rotator axis and the Rotator/ISS interface surface. From this mid range it can rotate +/- 240 degrees (Mid range point of symmetrical axis of CR lies along OSS, negative Y axis when in park).

Relative to the Optical Support Structure Coordinate System origin (x_0, y_0, z_0) = (0,0,0), the Cassegrain Rotator Coordinate System origin (x_r, y_r, z_r) = (0,0,0) is (x_0, y_0, z_0) = (0,0, -2050). The z_r axis is parallel and in the same sense as the z_0 axis. When rotator angle = 0, then the y_r axis is parallel and in the same sense as the y_0 axis. A positive rotator angle "F" rotates the Cassegrain Rotator Coordinate System about the z_0 axis in a negative sense.

3.5 Instrument and Instrument Support Structure coordinate systems

The coordinate system(s) for the instruments mounting to the Instrument Support Structure (ISS) is shown in drawing (90-GP-0000-0006). Here, each face of the ISS has a different local coordinate system defined for any instrument which may be mounted on that face. Here, when the telescope is zenith pointing, in the nominal park position, CR in the mid range of its travel, all side looking ports have a identical coordinate system local to each port which places the positive Z axis pointing into the center of the ISS (direction light is coming from), the Y axis pointing “up” (opposite to gravity vector), and the X axis pointing to the ‘right’ if you are looking from inside the ISS at the particular port in question (leaving a local right-handed system).

This leaves 4 local ‘systems’, one for each side looking face of the ISS, each with its origin a the intersection of the port faces mounting pads and the nominal optical axis for that port.

For the up-looking port, the Z axis is also looking to the direction the light is coming from (center of ISS). For the Y axis, consider the telescope horizon pointing, CR in the middle of its travel (parked, rotation at 90 degrees). The Y axis is then “up” (opposite to gravity vector) and the X axis facing to the right when looking from within the ISS at this port face. Here, X, Y, and Z are parallel to the corresponding axis of the Optical Support Structure, defined in 3.3 above.

Knowledge of the particular face to which an instrument is mounted (e.g. in the TCS) will allow application of the appropriate matrix to convert (X,Y,Z) to the astronomical coordinate system (ref. doc. #2 by PTW). With this system, individual instruments don't need to know which face they are on as each X,Y,Z looks the same and they can provide data such as instrument specific flexure and pointing terms relative to their local coordinate system.

Relative to the Cassegrain Rotator Coordinate System origin (x_r, y_r, z_r) = (0,0,0), the Instrument and Instrument Support Structure Coordinate System Port 1 origin (x_{i1}, y_{i1}, z_{i1}) = (0,0,0) is (x_r, y_r, z_r) = (0,0,-1600). The x_{i1} axis is parallel and in the same sense as the x_r axis. The y_{i1} axis is parallel and in the same sense as the y_r axis.

Relative to the Cassegrain Rotator Coordinate System origin (x_r, y_r, z_r) = (0,0,0), the Instrument and Instrument Support Structure Coordinate System Port 2 origin (x_{i2}, y_{i2}, z_{i2}) = (0,0,0) is (x_r, y_r, z_r) = (800,0,-800). The x_{i2} axis is parallel and in the same sense as the $-y_r$ axis. The y_{i2} axis is parallel and in the same sense as the z_r axis.

Relative to the Cassegrain Rotator Coordinate System origin (x_r, y_r, z_r) = (0,0,0), the Instrument and Instrument Support Structure Coordinate System Port 3 origin (x_{i3}, y_{i3}, z_{i3}) = (0,0,0) is (x_r, y_r, z_r) = (0,-800,-800). The x_{i3} axis is parallel and in the same sense as the $-x_r$ axis. The y_{i3} axis is parallel and in the same sense as the z_r axis.

Relative to the Cassegrain Rotator Coordinate System origin (x_r, y_r, z_r) = (0,0,0), the Instrument and Instrument Support Structure Coordinate System Port 4 origin (x_{i4}, y_{i4}, z_{i4}) =(0,0,0) is (x_r, y_r, z_r) = (-800,0,-800). The x_{i4} axis is parallel and in the same sense as the y_r axis. The y_{i4} axis is parallel and in the same sense as the z_r axis.

Relative to the Cassegrain Rotator Coordinate System origin (x_r, y_r, z_r) = (0,0,0), the Instrument and Instrument Support Structure Coordinate System Port 5 origin (x_{i5}, y_{i5}, z_{i5}) = (0,0,0) is (x_r, y_r, z_r) = (0,800,-800). The x_{i5} axis is parallel and in the same sense as the x_r axis. The y_{i2} axis is parallel and in the same sense as the z_r axis.

APPENDIX A

REFERENCED DRAWINGS

90-GP-0000-0006 INSTRUMENT AND INSTRUMENT SUPPORT STRUCTURE COORDINATE SYSTEM
90-GP-0001-0022 TELESCOPE MOUNT COORDINATE SYSTEM
90-GP-0001-0023 OPTICAL SUPPORT STRUCTURE COORDINATE SYSTEM
90-GP-0001-0024 CASSEGRAIN & PIER COORDINATE SYSTEM
89-GP-1000-0003 CASSEGRAIN ROTATOR CO-ORDINATE SYSTEM

NOTES, UNLESS OTHERWISE SPECIFIED:

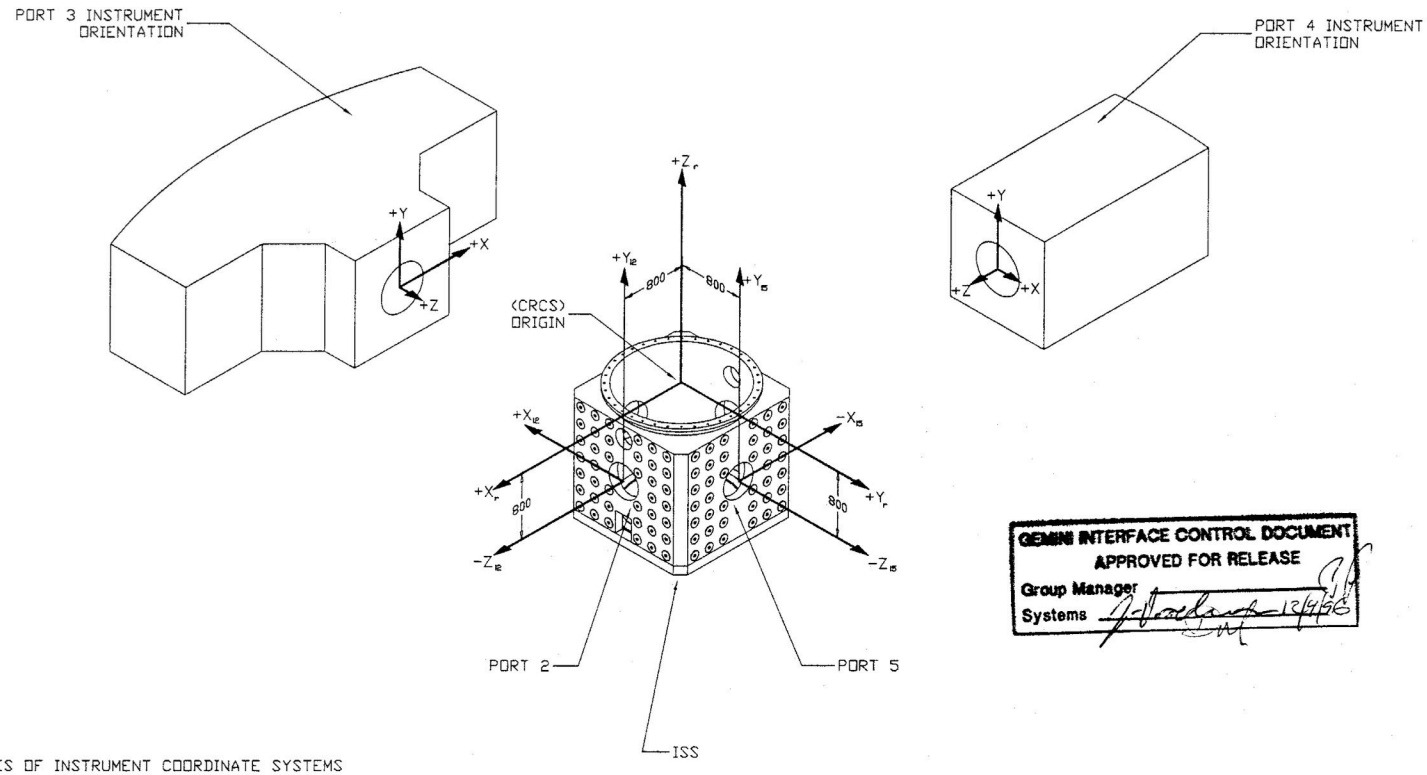

GEMINI INTERFACE CONTROL DOCUMENT
APPROVED FOR RELEASE
Group Manager
Systems 12/4/96

1. Z AXES OF INSTRUMENT COORDINATE SYSTEMS PASS THROUGH CENTER OF SCIENCE PORTS.

2. TELESCOPE IN 'PARK POSITION'
   - AZ IS EAST FACING (90°)
   - CASS ROTATOR IS MIDRANGE (0°)
   - ELEVATION: ZENITH TO HORIZON

3. IF CRCS ORIGIN IS (X,Y,Z)=(0,0,0) THEN PORT 2 ORIGIN IS (800,0,-800) WITH AXES AS SHOWN

4. IF CRCS ORIGIN IS (X,Y,Z)=(0,0,0) THEN PORT 5 ORIGIN IS (0,800,-800) WITH AXES AS SHOWN

GEMINI 8-M Telescopes Project

INSTRUMENT AND ISS COORDINATE SYSTEM

90-GP-0000-0006

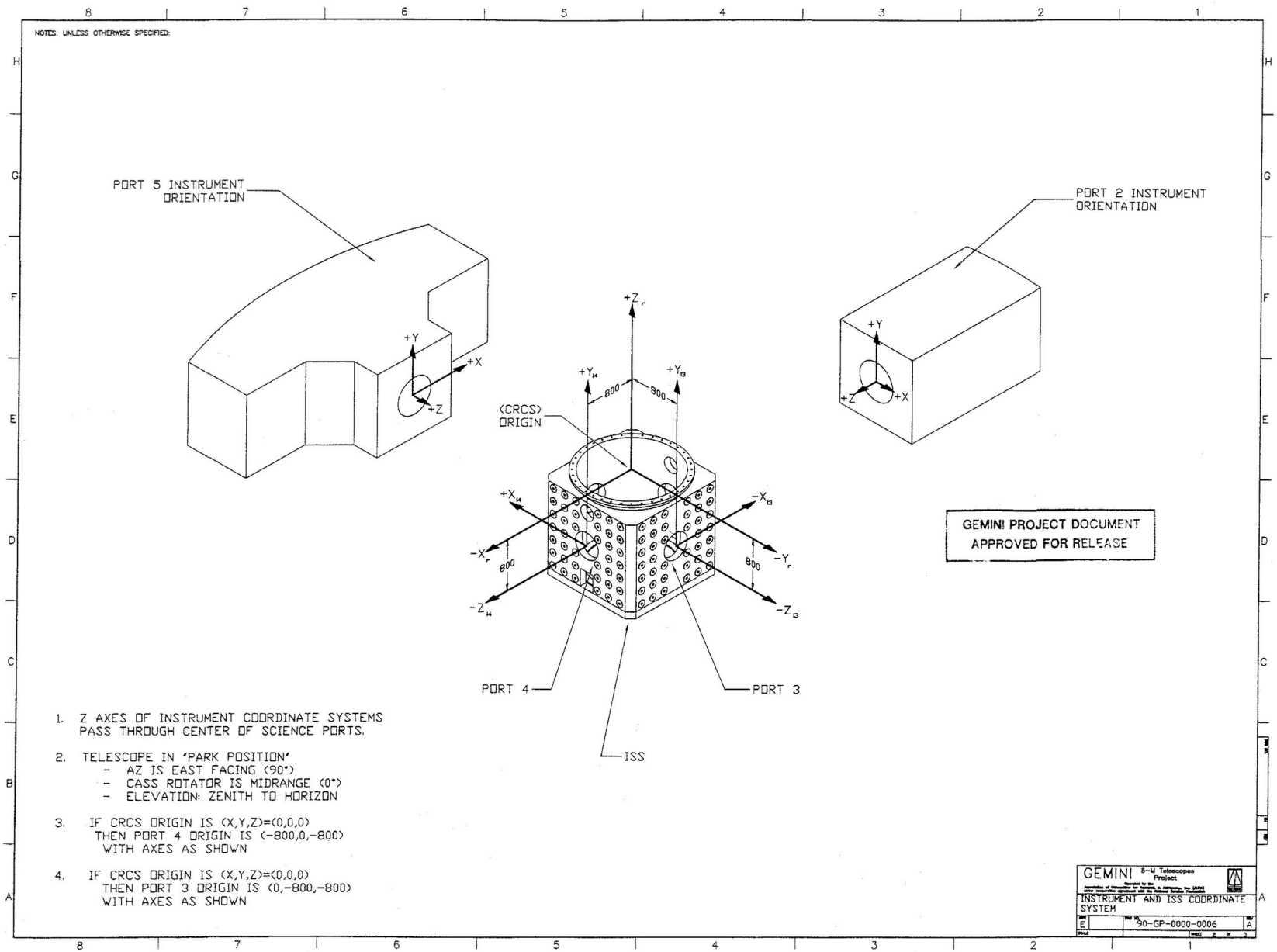
NOTES, UNLESS OTHERWISE SPECIFIED:
PORT 5 INSTRUMENT ORIENTATION
+Y
+X
+Z
PORT 2 INSTRUMENT ORIENTATION
+Y
+Z
+X
(CRCS) ORIGIN
+Z_r
+Y_M
+Y_B
800
800
+X_M
-X_B
-X_r
-Y_r
800
800
-Z_M
-Z_B
PORT 4
PORT 3
ISS
GEMINI PROJECT DOCUMENT
APPROVED FOR RELEASE
1. Z AXES OF INSTRUMENT COORDINATE SYSTEMS PASS THROUGH CENTER OF SCIENCE PORTS.
2. TELESCOPE IN 'PARK POSITION'
- AZ IS EAST FACING (90°)
- CASS ROTATOR IS MIDRANGE (0°)
- ELEVATION: ZENITH TO HORIZON
3. IF CRCS ORIGIN IS (X,Y,Z)=(0,0,0) THEN PORT 4 ORIGIN IS (-800,0,-800) WITH AXES AS SHOWN
4. IF CRCS ORIGIN IS (X,Y,Z)=(0,0,0) THEN PORT 3 ORIGIN IS (0,-800,-800) WITH AXES AS SHOWN
GEMINI 8-M Telescopes Project
INSTRUMENT AND ISS COORDINATE SYSTEM
90-GP-0000-0006
A

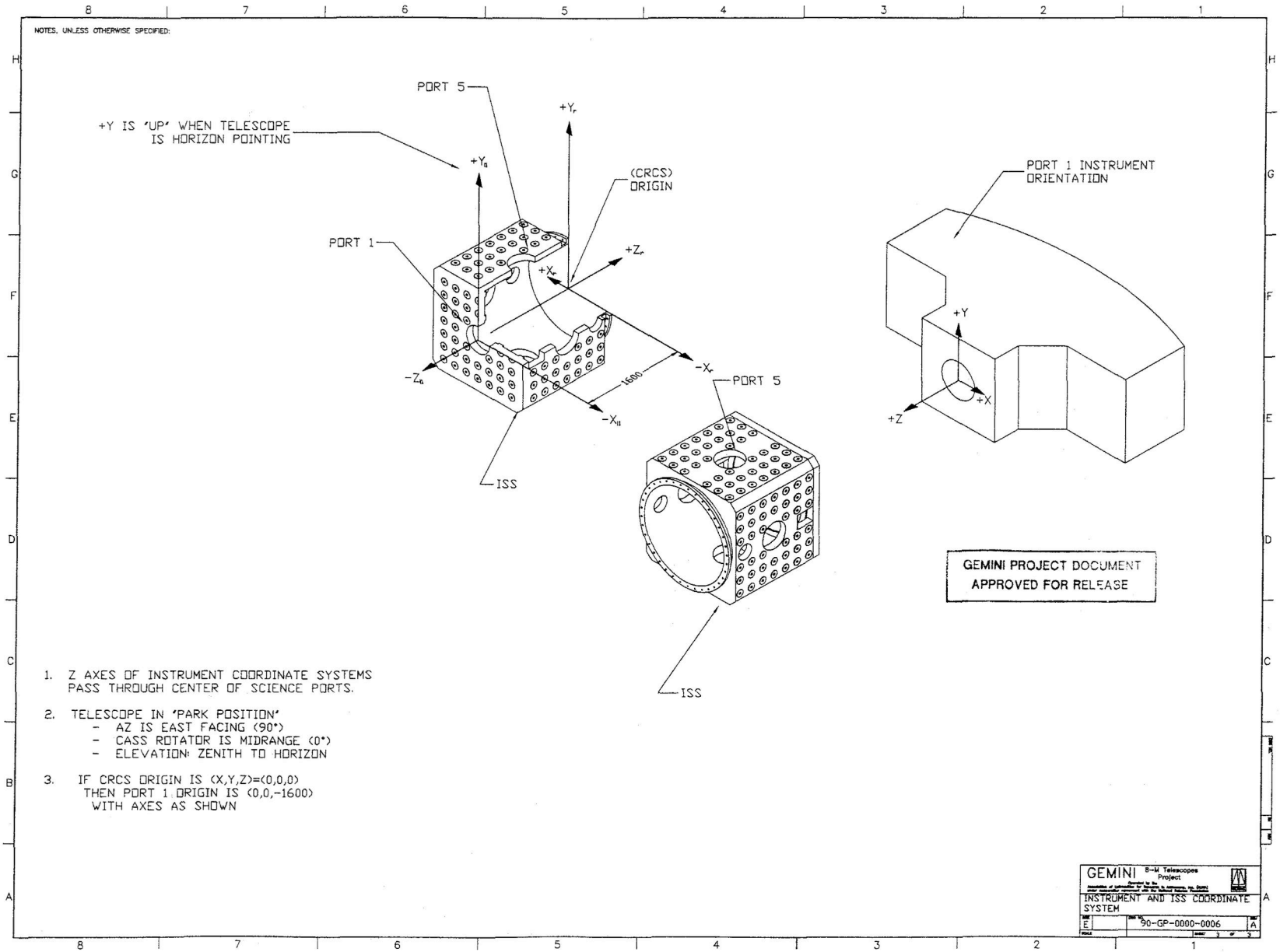
NOTES, UNLESS OTHERWISE SPECIFIED:
PORT 5
+Y IS 'UP' WHEN TELESCOPE IS HORIZON POINTING
+Yr
+Yn
(CRCS) ORIGIN
PORT 1
+Zr
+Xr
-Zn
-Xr
1600
-Xn
PORT 5
ISS
ISS
PORT 1 INSTRUMENT ORIENTATION
+Y
+X
+Z
GEMINI PROJECT DOCUMENT
APPROVED FOR RELEASE
1. Z AXES OF INSTRUMENT COORDINATE SYSTEMS PASS THROUGH CENTER OF SCIENCE PORTS.
2. TELESCOPE IN 'PARK POSITION'
- AZ IS EAST FACING (90°)
- CASS ROTATOR IS MIDRANGE (0°)
- ELEVATION: ZENITH TO HORIZON
3. IF CRCS ORIGIN IS (X,Y,Z)=(0,0,0) THEN PORT 1 ORIGIN IS (0,0,-1600) WITH AXES AS SHOWN
GEMINI 8-M Telescopes Project
INSTRUMENT AND ISS COORDINATE SYSTEM
90-GP-0000-0006
A

REV	DESCRIPTION	DATE	APPR
B	Note added RPE	7/25/95	

GEMINI INTERFACE CONTROL DOCUMENT
APPROVED FOR RELEASE
Group Manager [signature] 7/25/95
Systems [signature]

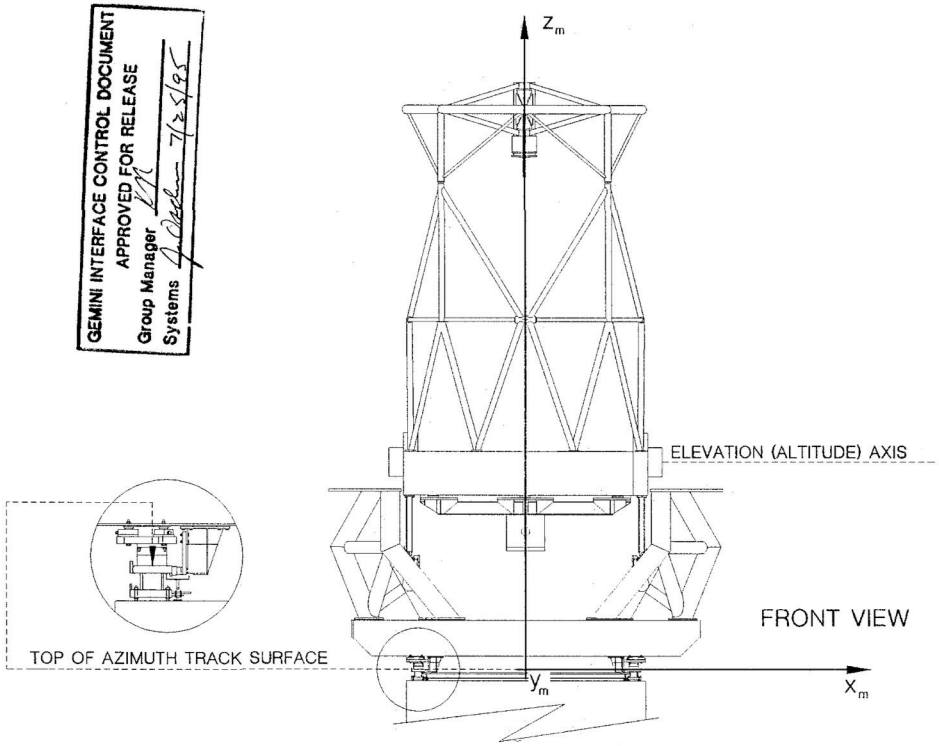

MOUNT x y z (azimuth rotation)

Note:
Center section gantry located on y_o side.

PARK position of telescope
A = 90 deg
E = 90 deg

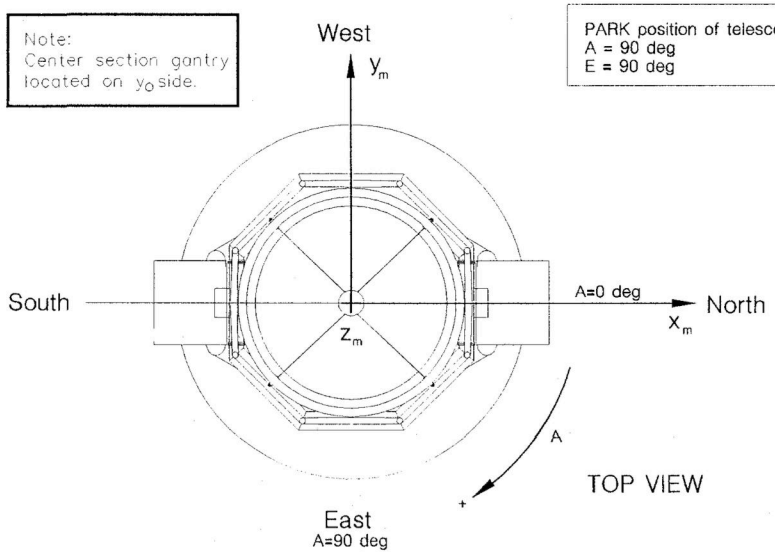

Origin: Intersection of azimuth axis and top surface of azimuth track

REV	DESCRIPTION	DATE
B	Note added @ JC	7/25/95

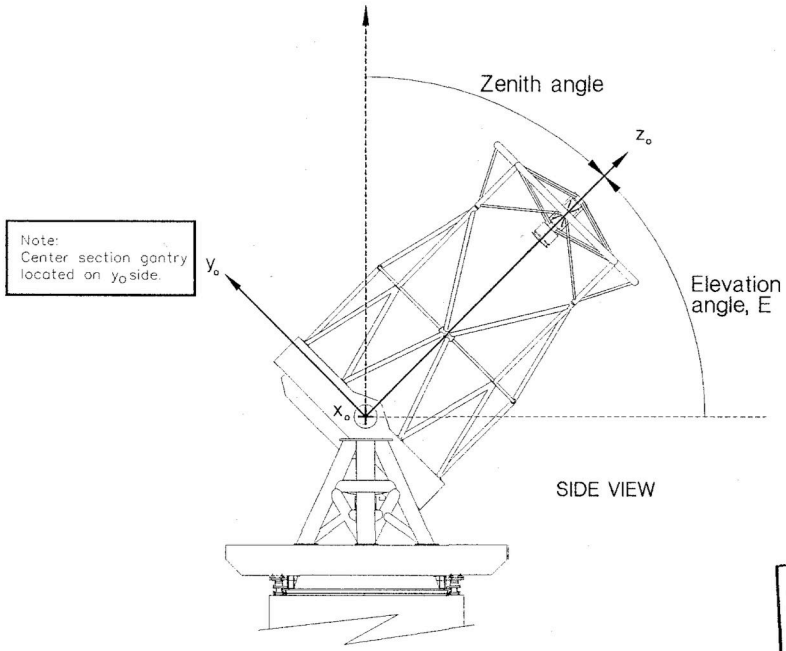

Note:
Center section gantry located on y_o side.

SIDE VIEW

OSS (Optical support structure)
Elevation axis rotation.

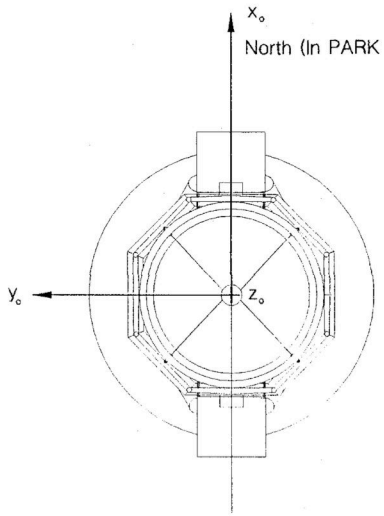

TOP VIEW

Origin: Intersection of azimuth and elevation axes

GEMINI INTERFACE CONTROL DOCUMENT
APPROVED FOR RELEASE
Group Manager Systems
7/24/95

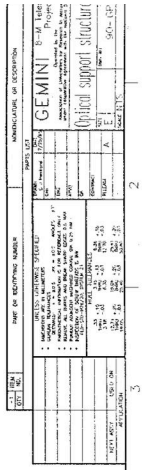

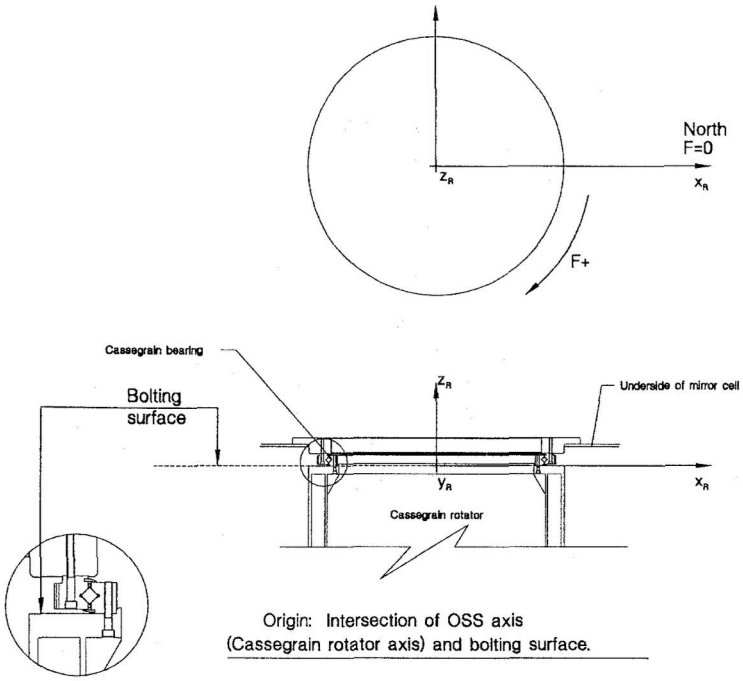

Origin: Intersection of OSS axis
(Cassegrain rotator axis) and bolting surface.

GEMINI INTERFACE CONTROL DOCUMENT
APPROVED FOR RELEASE
Group Manager Systems

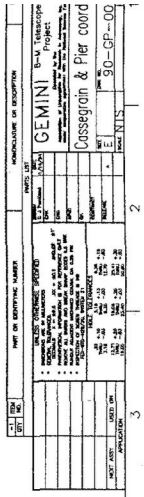

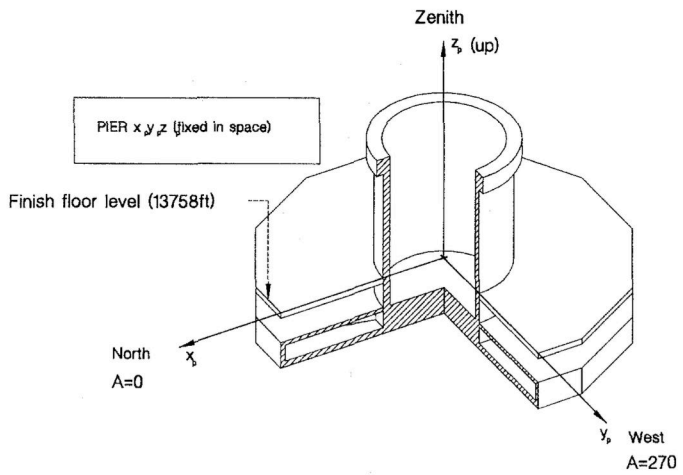

Origin: Intersection of azimuth axis and finish floor level.

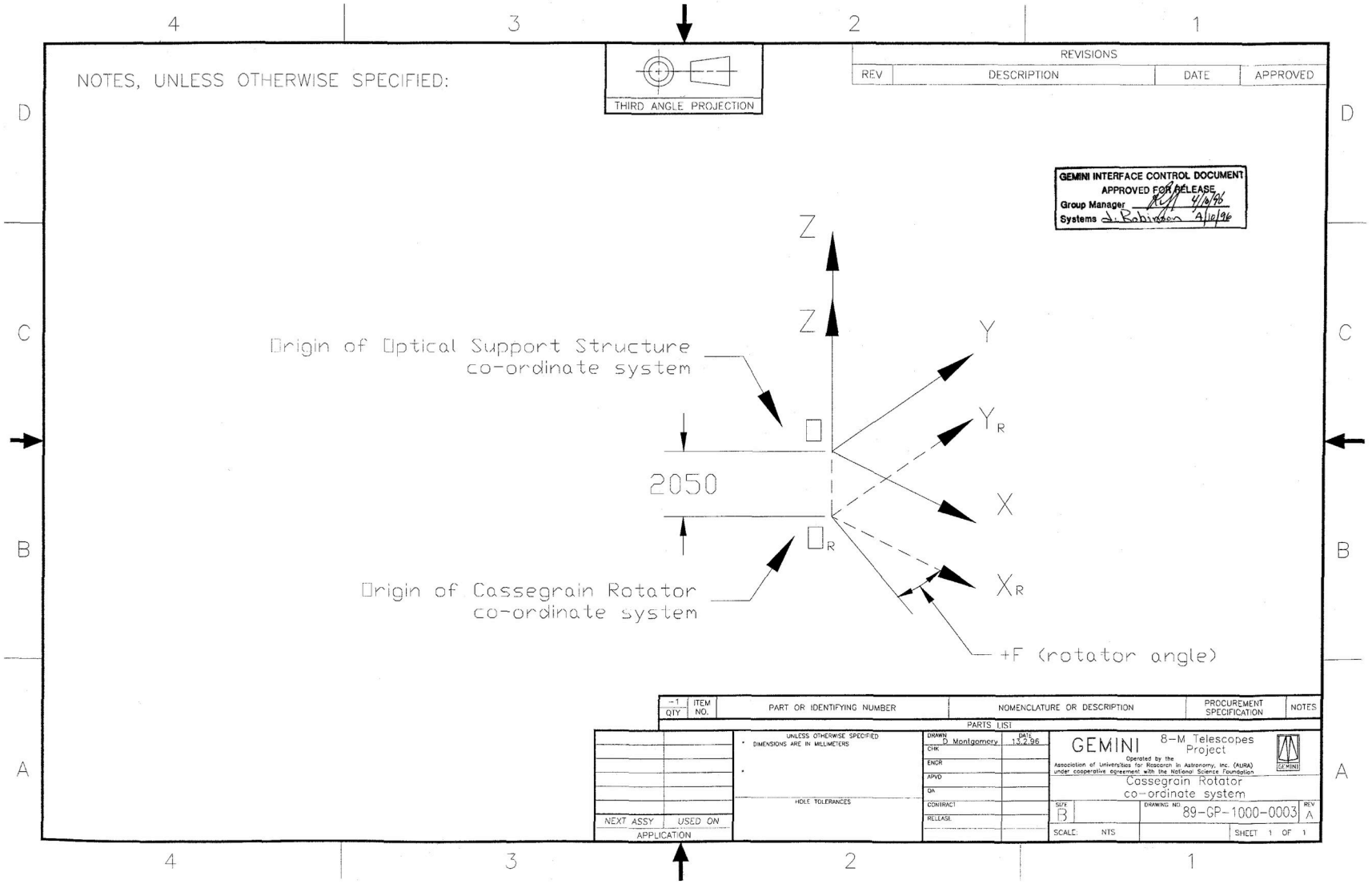
NOTES, UNLESS OTHERWISE SPECIFIED:
THIRD ANGLE PROJECTION
REVISIONS
REV
DESCRIPTION
DATE
APPROVED
GEMINI INTERFACE CONTROL DOCUMENT
APPROVED FOR RELEASE
Group Manager
Systems
Z
Z
Y
Y_R
X
X_R
Origin of Optical Support Structure co-ordinate system
2050
Origin of Cassegrain Rotator co-ordinate system
+F (rotator angle)
-1 QTY
ITEM NO.
PART OR IDENTIFYING NUMBER
NOMENCLATURE OR DESCRIPTION
PROCUREMENT SPECIFICATION
NOTES
PARTS LIST
UNLESS OTHERWISE SPECIFIED
DIMENSIONS ARE IN MILLIMETERS
HOLE TOLERANCES
NEXT ASSY
USED ON
APPLICATION
DRAWN D Montgomery
DATE 13.2.96
CHK
ENGR
APVD
QA
CONTRACT
RELEASE
GEMINI
8-M Telescopes Project
Operated by the Association of Universities for Research in Astronomy, Inc. (AURA) under cooperative agreement with the National Science Foundation
Cassegrain Rotator co-ordinate system
SIZE B
DRAWING NO. 89-GP-1000-0003
REV A
SCALE: NTS
SHEET 1 OF 1