NOTES, UNLESS OTHERWISE SPECIFIED:

REVISIONS			
REV	DESCRIPTION	DATE	APPROVED
B	3975 dimension changed + associated dimensions new view added + reference dimensions	7.28.95	
C	Dimensions for MCSF inside (A/F) added	08/10/95	

Volume inside bold lines may be occupied by instrumentation.

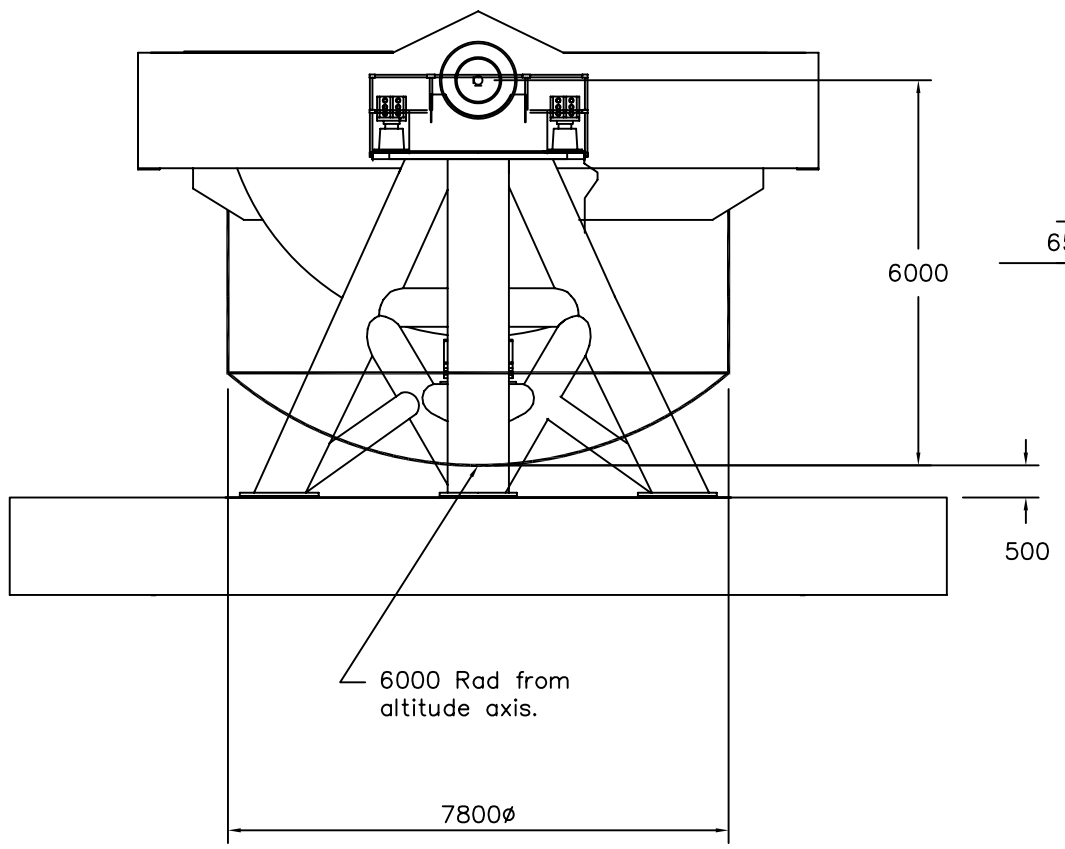

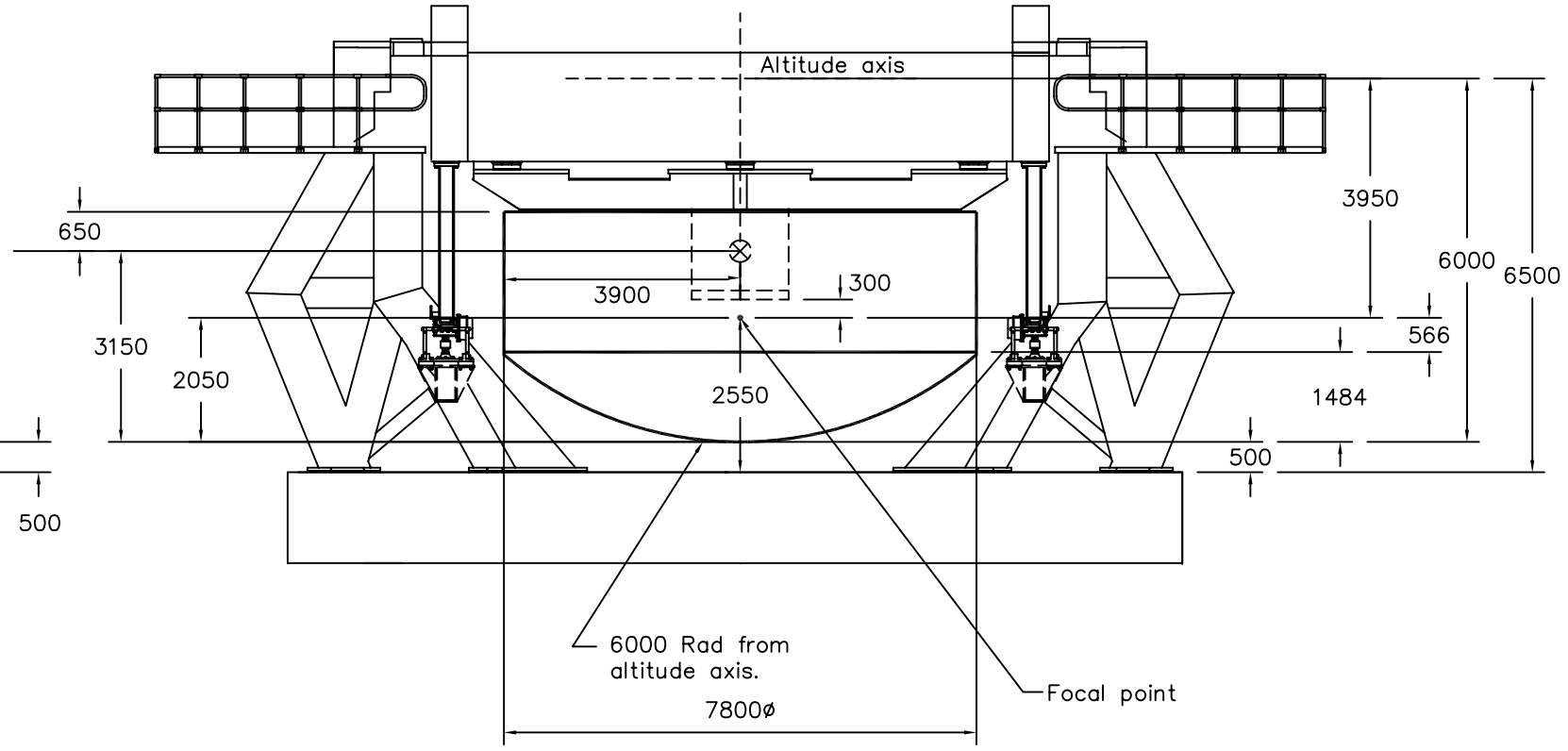

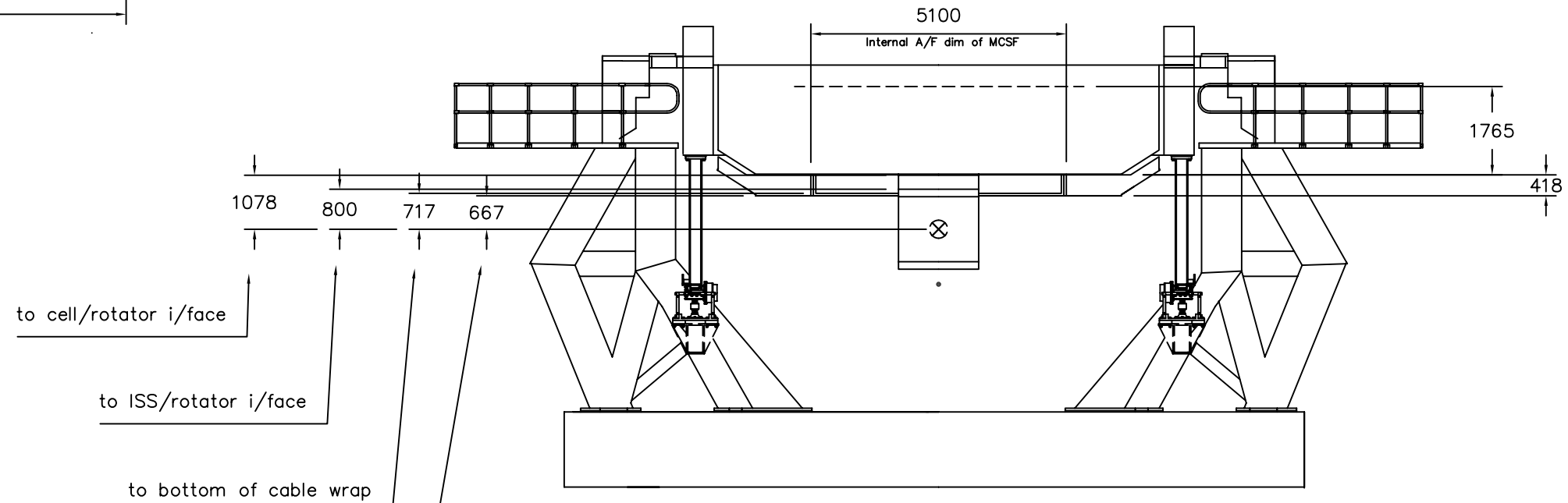

Note: Outlines are for reference only and may be innacurate

TITLE: Cassegrain instrument zone				
DRAWN	DATE	SIZE	DWG NO.	REV
G J Pentland	08/10/95	E	90-GP-0001-0037	C
		SCALE NTS	SHEET 1 OF 1	