OCTOCAM

A fast multichannel imager and spectrograph

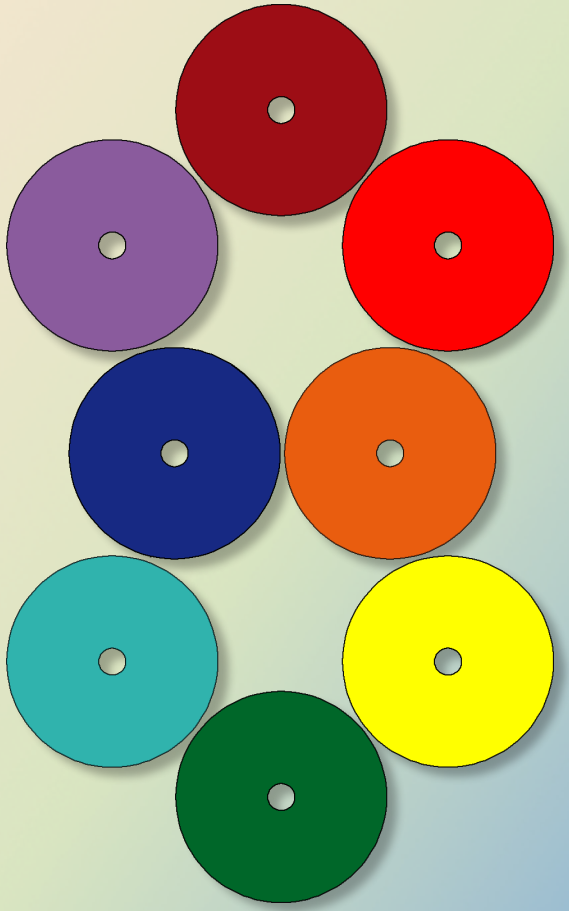

Antonio de Ugarte Postigo
on behalf of the OCTOCAM team

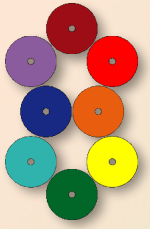

The OCTOCAM consortium

In response for GIFS call in 2014

- *The instrument should be a workhorse instrument*
- *The proposals should be science driven and include science cases.*
- *The instrument should fit within the technical constraints of the Gemini telescopes as they now exist.*
- *The expected cost of the instrument between 8 and 12 MUSD*
- *The technical risk of the instrument should be modest.*
- *The instrument should be highly efficient.*
- *Although proposals for all instruments fitting these criteria will be fully considered, it is the majority opinion of the STAC that a wide-bandwidth moderate-resolution spectrograph is likely to prove most compelling.*

The OCTOCAM team

Andrea Bianco

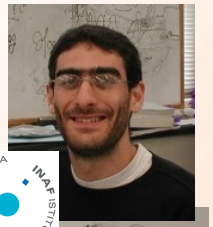

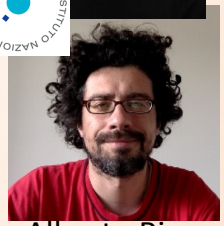

Alberto Riva



Christina Thöne, **PM Spain**



Antonio de Ugarte Postigo
PI



Pete Roming,
PM US, coPI



Susan Pope, **SE**

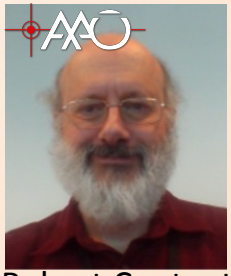

Robert Content

Marisa Garcia Vargas





Alexander van der Horst
PS





Kristian Persson

Ronnie Killough, **DSE**



Frans
Snik





Manuel Maldonado
Ernesto Sanchez-Blanco



Greg Winters

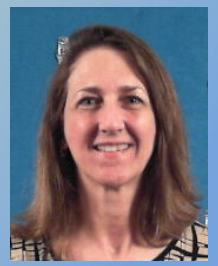

Sandee Jeffers

The OCTOCAM team

Andrea Bianco

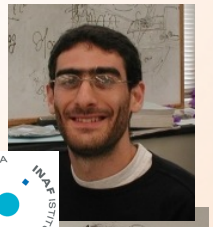

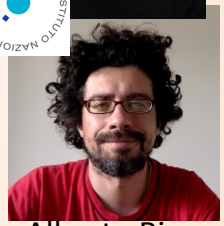

Alberto Riva

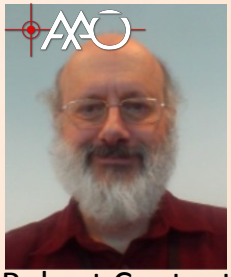

Robert Content



Frans Snik

Christi

Science Advisory Committee

Álvaro Álvarez-Candal, Brazil
Rodolfo Angeloni, Chile
Stefano Bagnulo, UK
Franz Bauer, Chile
Amanda Bayless, USA
Melina Bersten, Argentina
Marcelo Borges Fernandes, Brazil
Tom Broadhurst, Spain
Nat Butler, USA
Brad Cenko, USA
Lydia Cidale, Argentina
Jesus Corral-Santana, Chile
Peter Curran, Australia
Vik Dhillon, UK
René Duffard, Spain
Robert Fesen, USA
Gastón Folatelli, Argentina
Jonathan Fortney, USA
Ori Fox, USA
Anna Frebel, USA
Lluís Galbany, Chile
Rafael Garrido Haba, Spain
Daryl Haggard, USA
Eric Hintz, USA
David Kaplan, USA
Oleg Kargaltsev, USA
Chryssa Kouveliotou, USA
Adam Kraus, USA
Michaela Kraus, Czech Republic
Ho-Gyu Lee, South Korea
Chris Lidman, Australia
Teo Muñoz-Darias, Spain
Jerome Orosz, USA
Thomas Pannuti, USA
Jennifer Patience, USA
Daniel Perley, USA
Noemí Pinilla-Alonso, USA
Brian Schmidt, Australia
Steve Schulze, Chile
Denise Stephens, USA
Juan Carlos Suárez, Spain
Nial Tanvir, UK
Ezequiel Treister, Chile
Daniel Vanden Berk, USA
Sjoert van Velzen, USA
Stefanie Wachter, Germany



Susan Pope, **SE**



Ronnie Killough, **DSE**

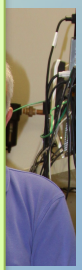

ters

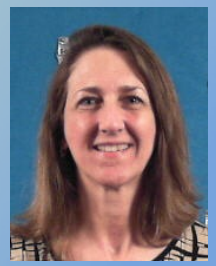

Sandee Jeffers

Javier Gorosabel



1969-2015

Covering the scientific needs of the 2020s

- New facilities, new role for Gemini: LSST, ALMA, SKA, ELTs, JWST…
- Workhorse instrument to cover as many science topics as possible
- Simultaneous VIS/NIR
- Time domain Astrophysics
- Use past experience to create a new concept of instrument



Broad science team, broad science needs

- Science advisory team with 46 members
- Broad range of scientific topics
- Different communities with diverse needs
- Science team surveys → instrument design

- Simultaneous optical-nIR multiband photometry, optical-nIR spectroscopy & time domain astronomy
- Broad band IFU, spectropolarimetry
- Uncovered region of observational space:

*temporal resolution – **spectral coverage** – spectral resolution*

Science topics

- Transients
- Trans-Neptunian objects
- Extrasolar planets
- Asteroseismology & pulsating stars
- Massive stars
- Brown dwarfs
- Low-mass binaries
- Low metallicity stars
- Isolated neutron stars
- Magnetars
- Interacting binaries
- Millisecond pulsar binaries
- X-ray binaries
- Supernovae
- Supernova remnants
- Gamma-ray bursts
- Active galactic nuclei
- Tidal disruption events
- Galaxy clusters

Fundamental Questions

- Rapidly characterize transients
- Advance physical understanding behind extreme phenomena such as gamma-ray bursts, supernovae, magnetars, and X-ray binaries
- Look for the origin of our solar system in comets, asteroids and transneptunian objects
- Perform detailed asteroseismoloy
- Observe the first generation of stars and their environments
- Follow the evolution of the Universe throughout cosmological times

Braga-Ribas et al. 2014

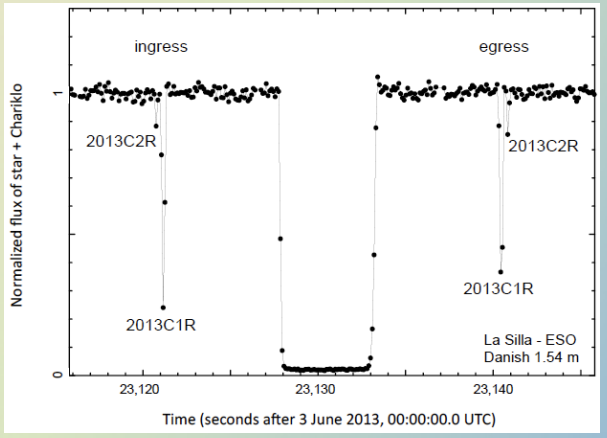

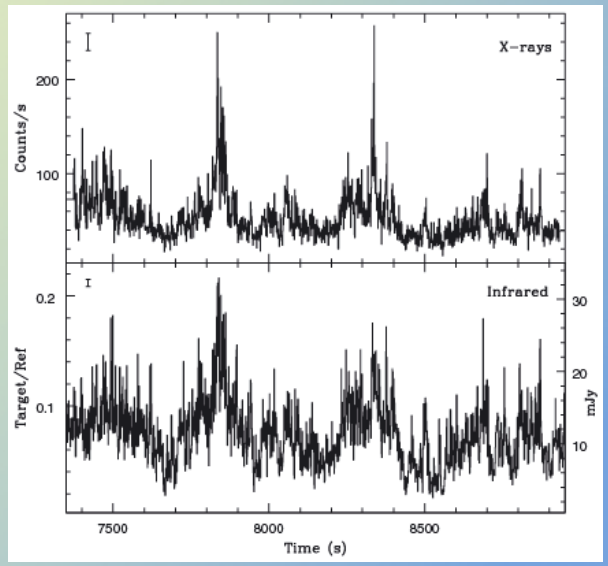

Casella et al. 2010

OCTOCAM concept

OCTOCAM concept



OCTOCAM concept

- Multi-channel (8!)



OCTOCAM concept

- Multi-channel (8!)



OCTOCAM concept

- Multi-channel (8!)
- Wide wavelength range (3700-23500 Å)



OCTOCAM concept

- Multi-channel (8!)
- Wide wavelength range (3700-23500 Å)
- Multiband imaging

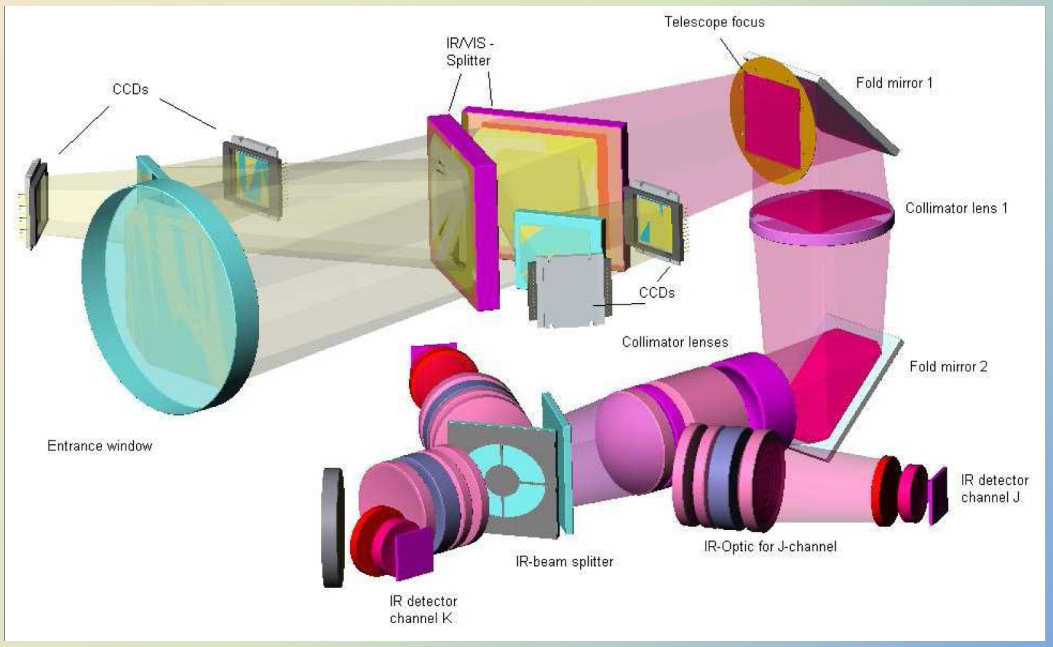

GROND - Greiner et al. 2007

OCTOCAM concept

- Multi-channel (8!)
- Wide wavelength range (3700-23500 Å)
- Multiband imaging
- Broad band spectroscopy

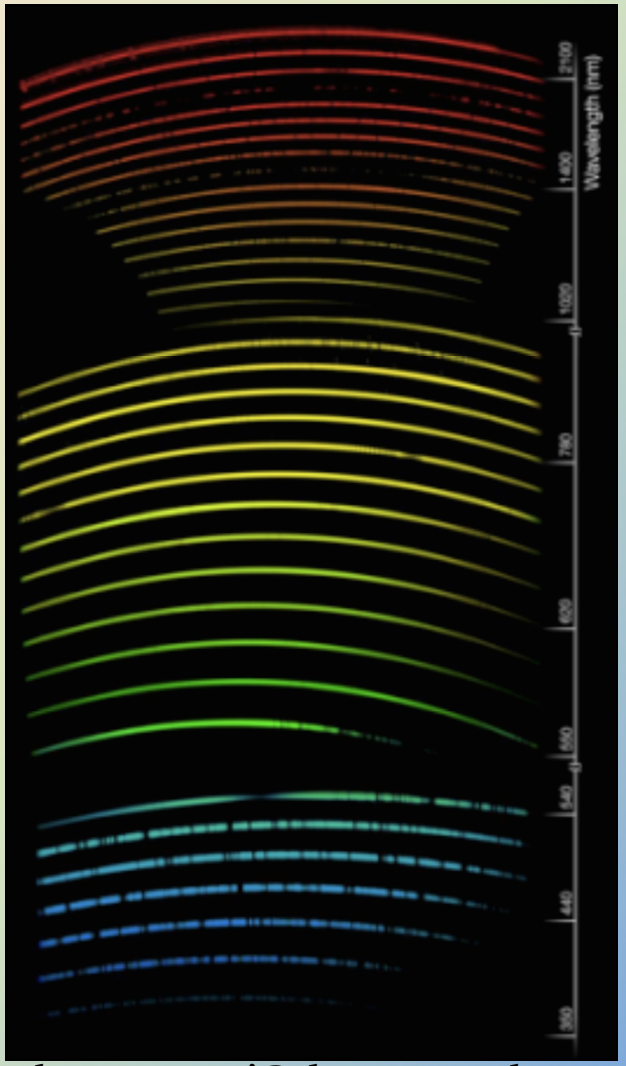

X-shooter - D'Odorico et al. 2006

OCTOCAM concept

- Multi-channel (8!)
- Wide wavelength range (3700-23500 Å)
- Multiband imaging
- Broad band spectroscopy
- High-time resolution

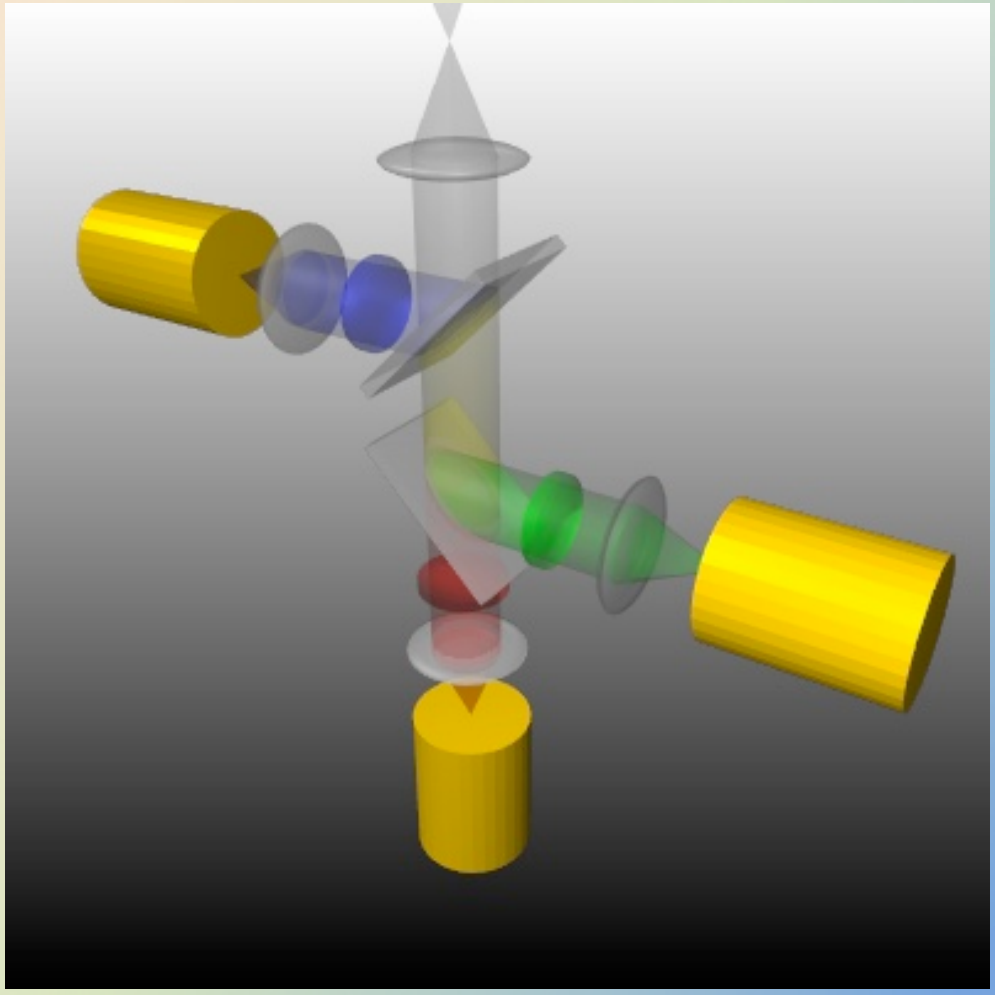

ULTRACAM - Dhillon et al. 2007

OCTOCAM concept

- Multi-channel (8!)
- Wide wavelength range (3700-23500 Å)
- Multiband imaging
- Broad band spectroscopy
- High-time resolution
- GROND + X-shooter + ULTRACAM + **MORE!** = OCTOCAM

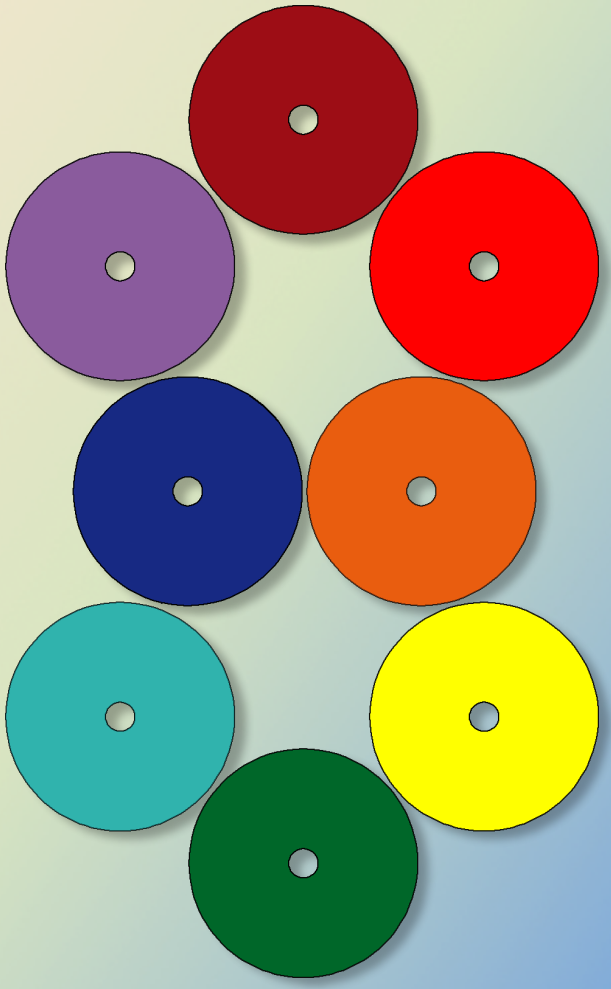

Instrument scheme

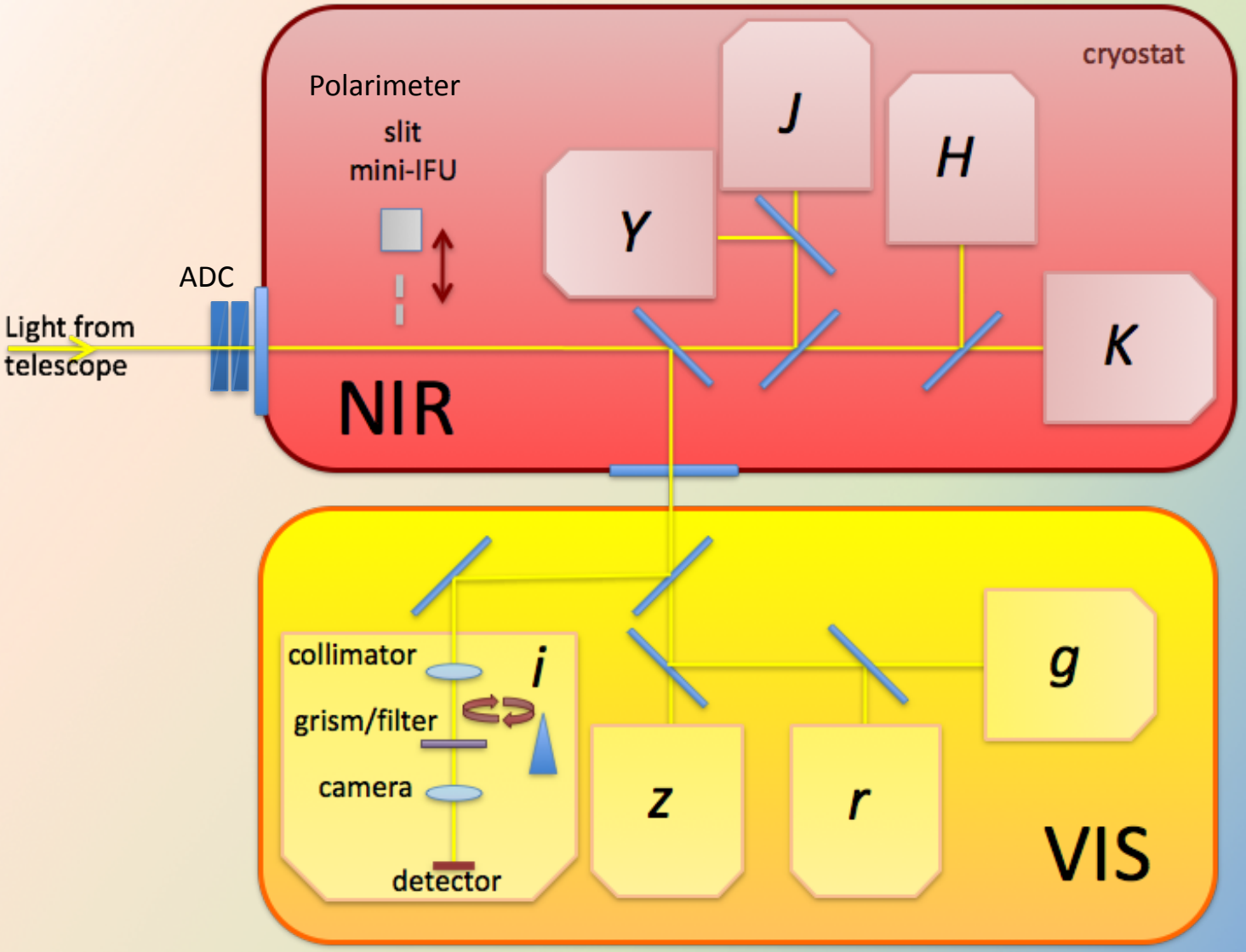

Design guidelines

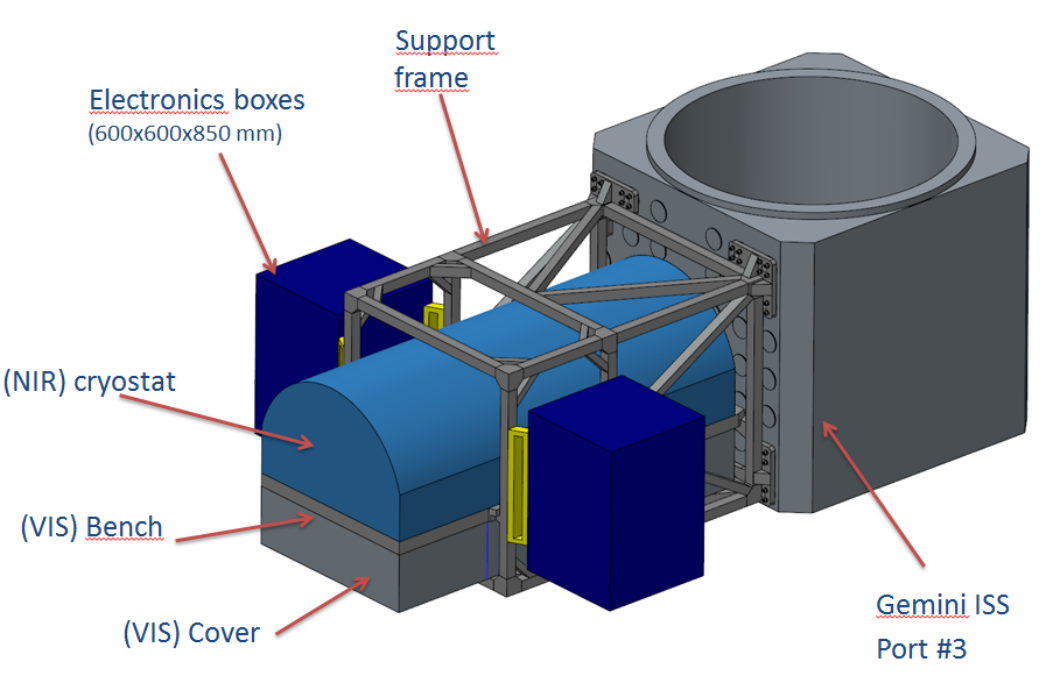

- Efficient
- Simple
- Compact
- Light-weight
- Minimum number of moving parts

- High efficiency dichroics
- VPH gratings
- Small pupil size (40-50 mm)
- Single long slit
- Optics shared by different arms

Design guidelines

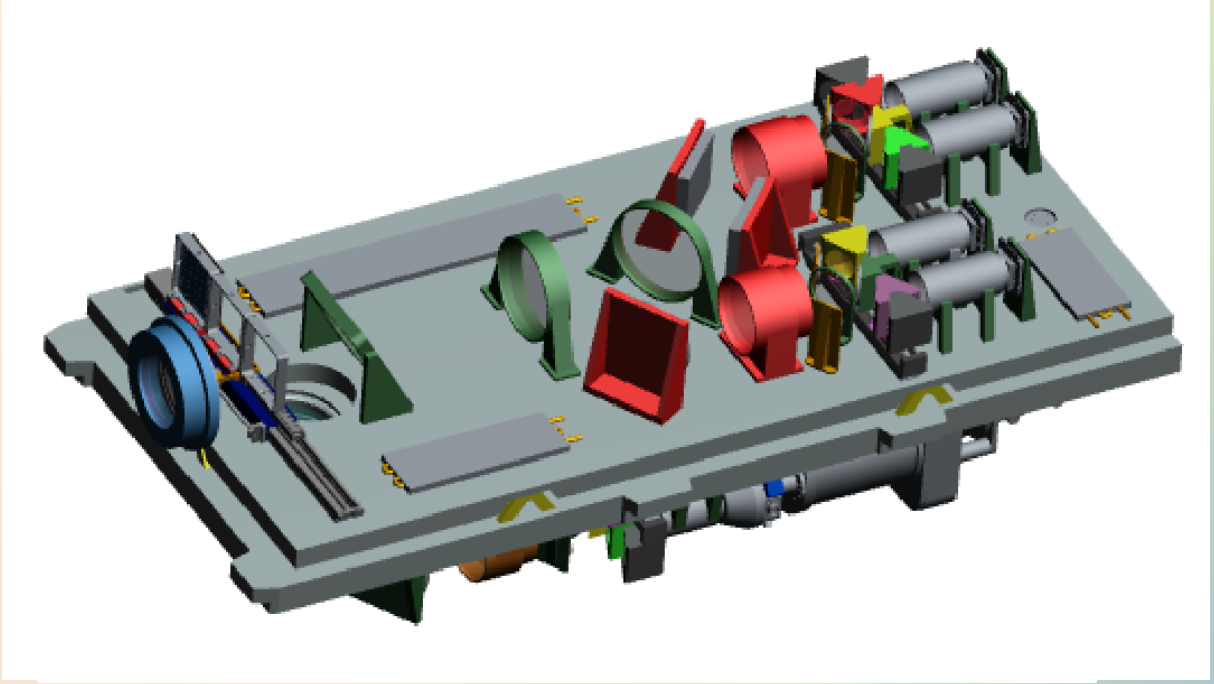

- Efficient
- Simple
- Compact
- Light-weight
- Minimum number of moving parts

- High efficiency dichroics
- VPH gratings
- Small pupil size (40-50 mm)
- Single long slit
- Optics shared by different arms

Design guidelines

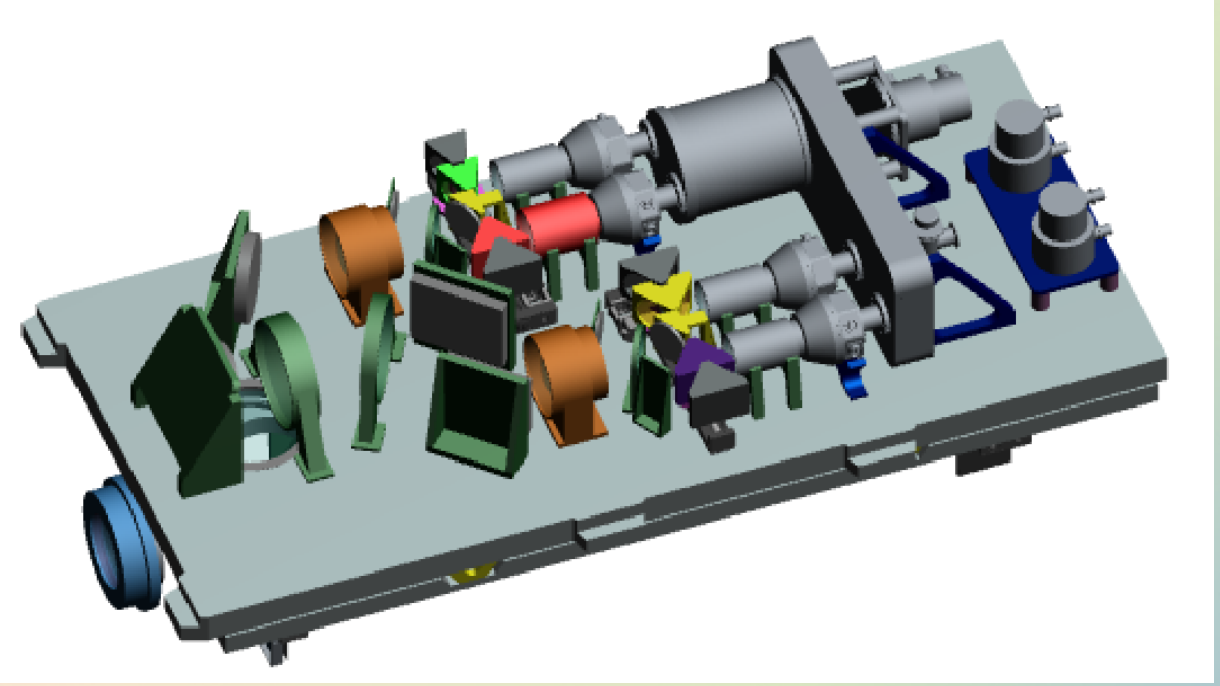

- Efficient
- Simple
- Compact
- Light-weight
- Minimum number of moving parts

- High efficiency dichroics
- VPH gratings
- Small pupil size (40-50 mm)
- Single long slit
- Optics shared by different arms

Imaging

- Simultaneous VIS/NIR observations in *g, r, i, z, Y, J, H,* K_S
- Frame transfer detectors + HAWAII-2RG
- Negligible overheads
  - No filter change time loss
  - No readout time loss
- 3'x3' field of view
- 3'x3'x8 = 72 sqr. arcmin

Imaging

- Simultaneous VIS/NIR observations in *g, r, i, z, Y, J, H,* K_S
- Frame transfer detectors + HAWAII-2RG
- Negligible overheads
  - No filter change time loss
  - No readout time loss
- 3'x3' field of view
- 3'x3'x8 = 72 sqr. arcmin

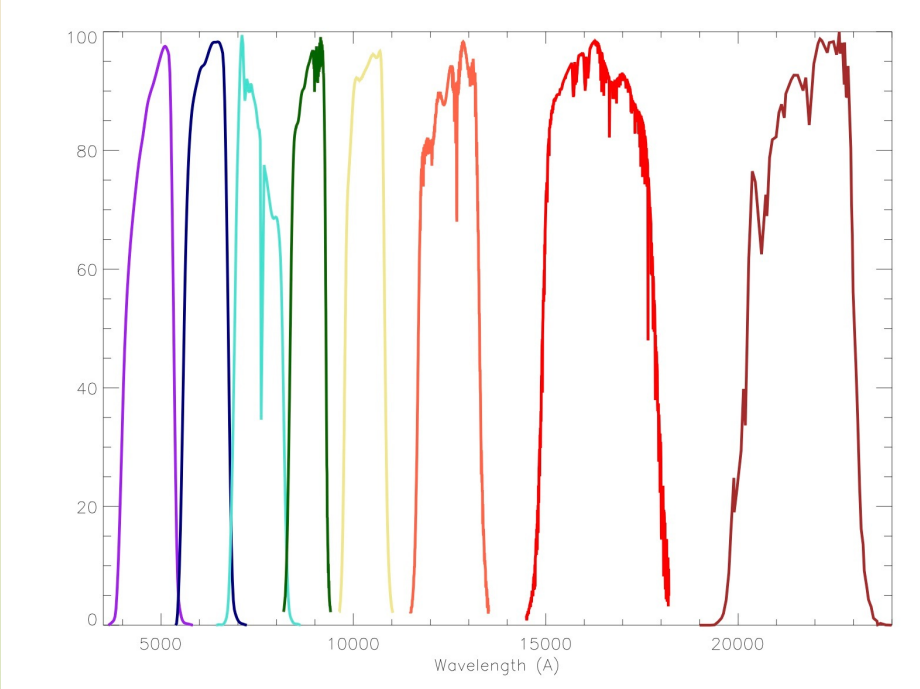

Imaging

- Simultaneous VIS/NIR observations in *g, r, i, z, Y, J, H,* K_S
- Frame transfer detectors + HAWAII-2RG
- Negligible overheads
  - No filter change time loss
  - No readout time loss
- 3'x3' field of view
- 3'x3'x8 = 72 sqr. arcmin

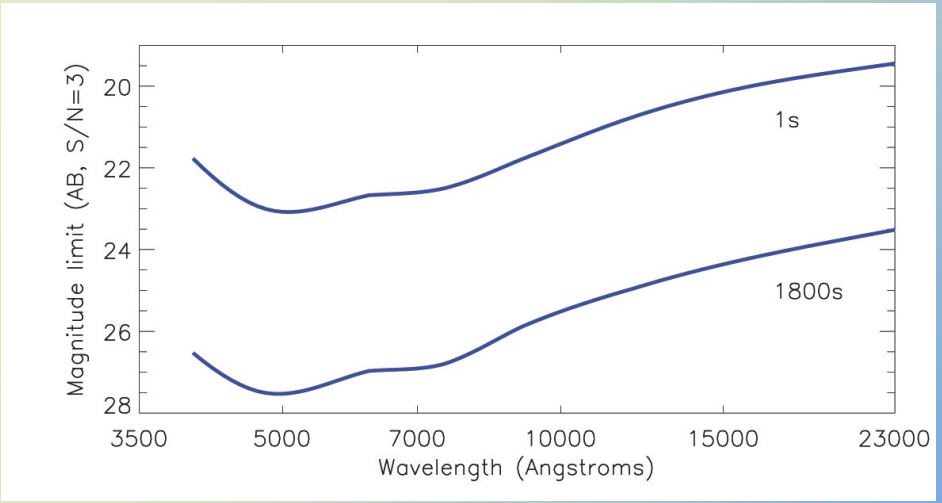

Imaging

- Simultaneous VIS/NIR observations in *g, r, i, z, Y, J, H,* K_S
- Frame transfer detectors + HAWAII-2RG
- Negligible overheads
  - No filter change time loss
  - No readout time loss
- 3’x3’ field of view
- 3’x3’x8 = 72 sqr. arcmin

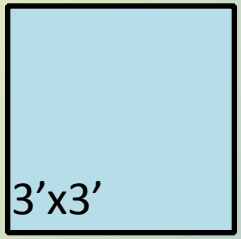

Imaging

- Simultaneous VIS/NIR observations in *g, r, i, z, Y, J, H,* K_S
- Frame transfer detectors + HAWAII-2RG
- Negligible overheads
  - No filter change time loss
  - No readout time loss
- 3’x3’ field of view
- 3’x3’x8 = 72 sqr. arcmin

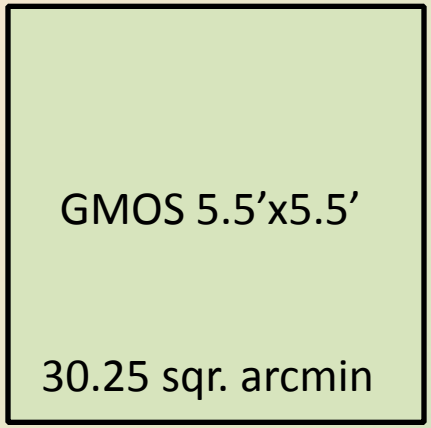

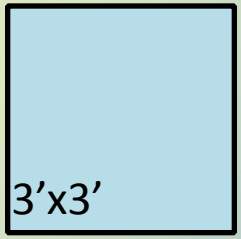

Imaging

- Simultaneous VIS/NIR observations in *g, r, i, z, Y, J, H,* K_S
- Frame transfer detectors + HAWAII-2RG
- Negligible overheads
  - No filter change time loss
  - No readout time loss
- 3’x3’ field of view
- 3’x3’x8 = 72 sqr. arcmin

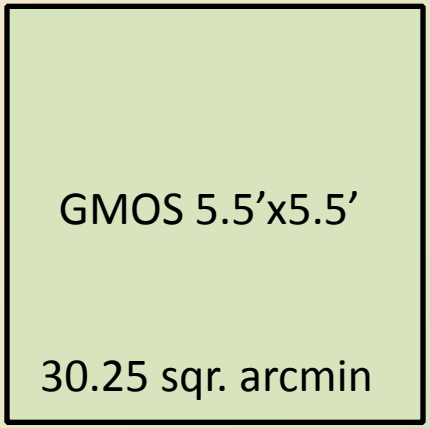

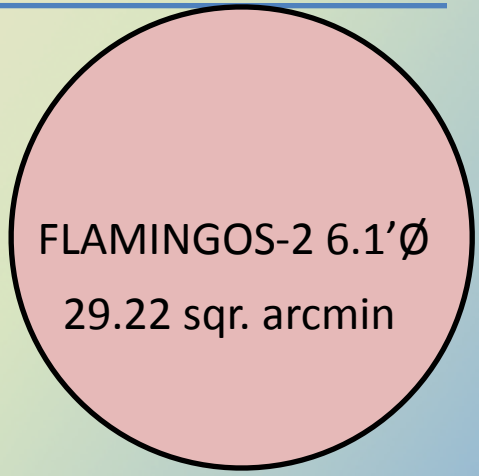

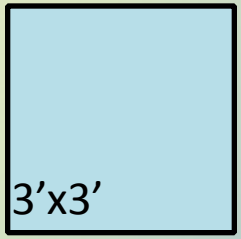

Imaging

- Simultaneous VIS/NIR observations in *g, r, i, z, Y, J, H,* K_S
- Frame transfer detectors + HAWAII-2RG
- Negligible overheads
  - No filter change time loss
  - No readout time loss
- 3'x3' field of view
- 3'x3'x8 = 72 sqr. arcmin

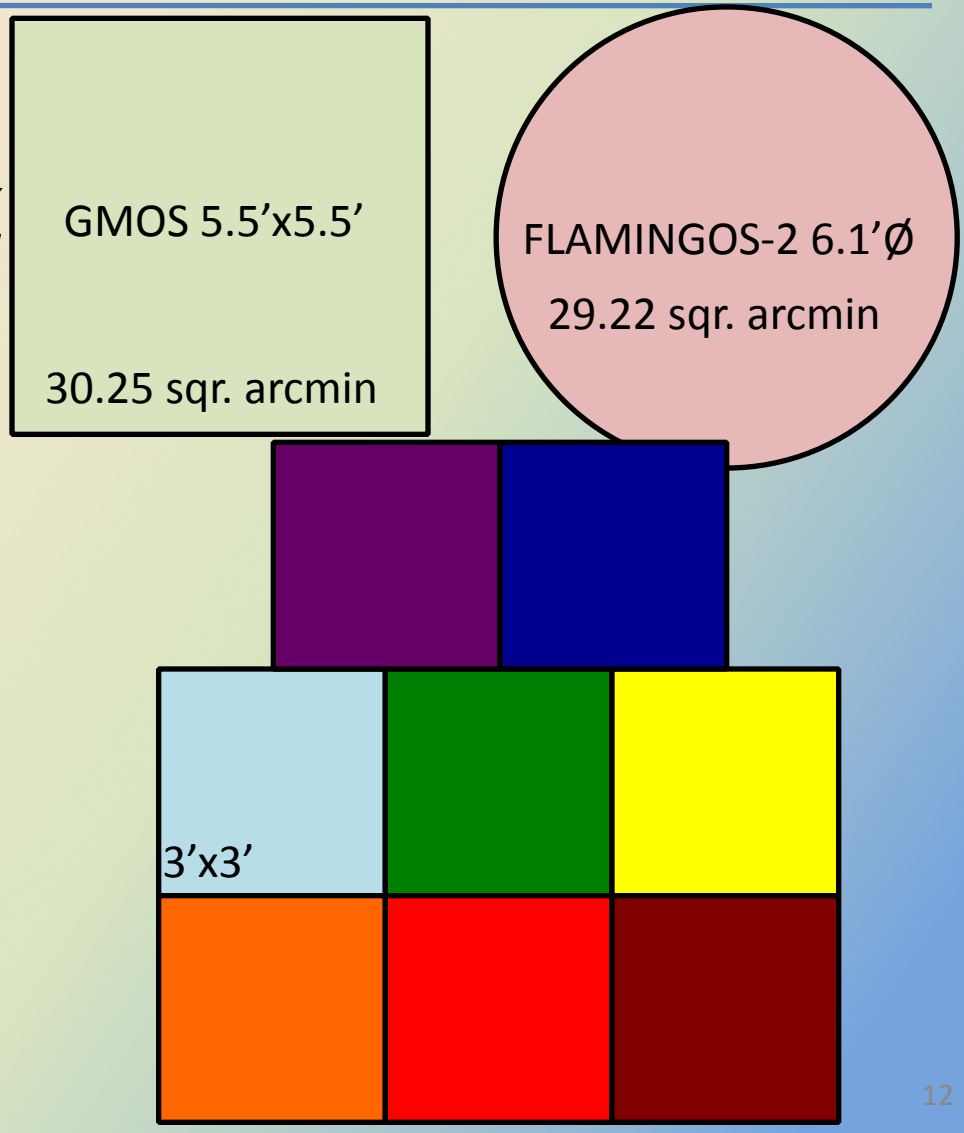

Imaging

- Simultaneous VIS/NIR observations in *g, r, i, z, Y, J, H,* K_S
- Frame transfer detectors + HAWAII-2RG
- Negligible overheads
  - No filter change time loss
  - No readout time loss
- 3'x3' field of view
- 3'x3'x8 = 72 sqr. arcmin

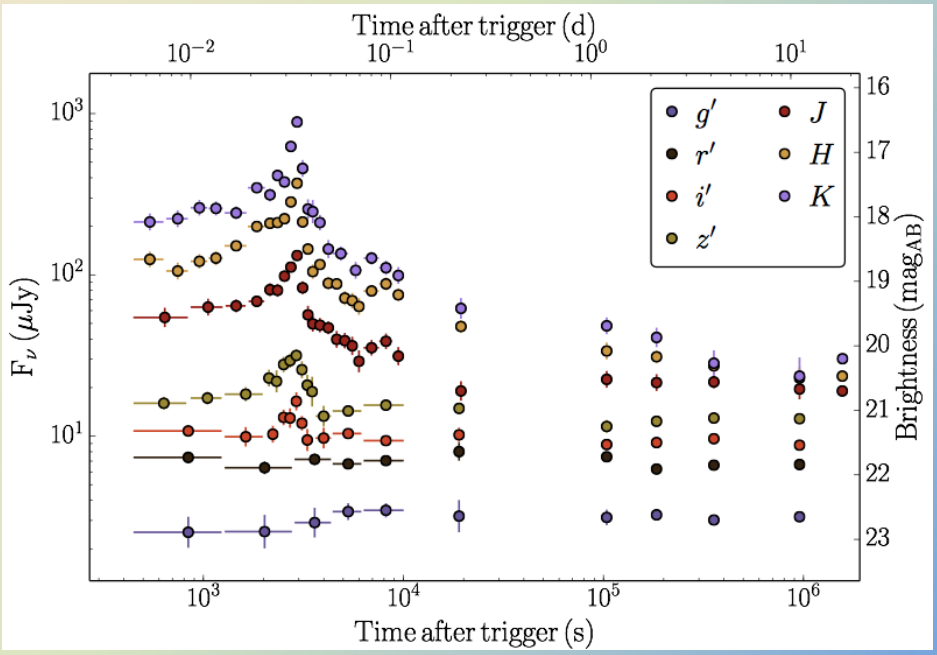

Greiner et al.

Spectroscopy

- From 3 700 Å to 23 500 Å
  - [OII] 3727/3729 Å at z = 0
  - H-alpha at z = 2.5
  - Extinguished sources
- High efficiency VPH gratings
- Resolution of 3000-4000
  - Look through the NIR sky lines
  - Continuum of faint sources
  - Resolve velocity components in star forming galaxies.
- Long slit of 3 arcminutes
- Atmospheric dispersion corrector

Spectroscopy

- From 3 700 Å to 23 500 Å
  - [OII] 3727/3729 Å at z = 0
  - H-alpha at z = 2.5
  - Extinguished sources
- High efficiency VPH gratings
- Resolution of 3000-4000
  - Look through the NIR sky lines
  - Continuum of faint sources
  - Resolve velocity components in star forming galaxies.
- Long slit of 3 arcminutes
- Atmospheric dispersion corrector

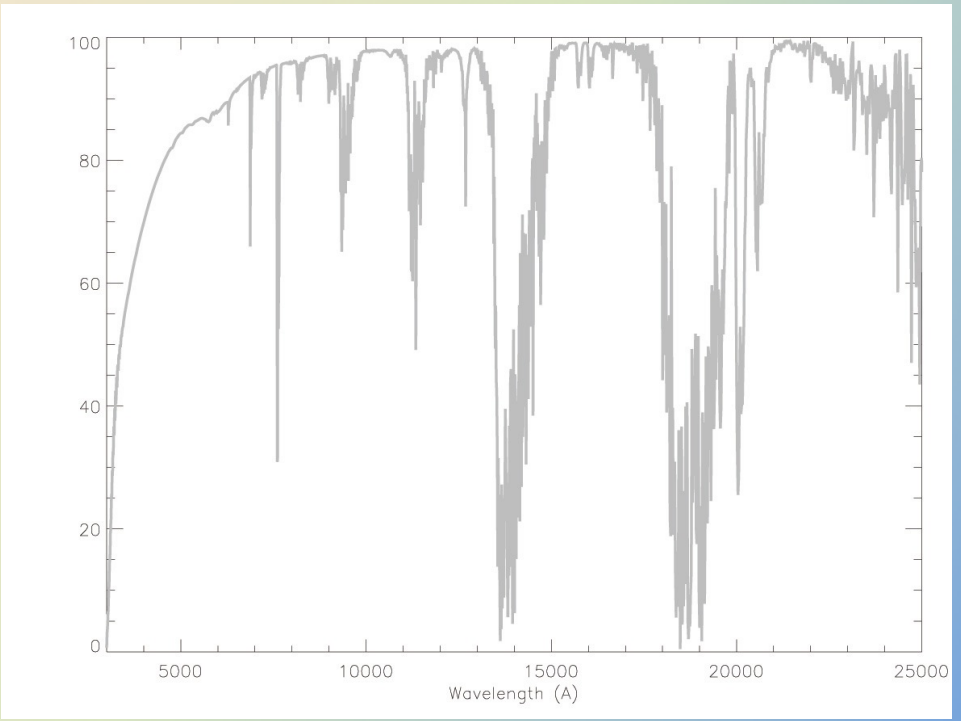

Spectroscopy

- From 3 700 Å to 23 500 Å
  - [OII] 3727/3729 Å at z = 0
  - H-alpha at z = 2.5
  - Extinguished sources
- High efficiency VPH gratings
- Resolution of 3000-4000
  - Look through the NIR sky lines
  - Continuum of faint sources
  - Resolve velocity components in star forming galaxies.
- Long slit of 3 arcminutes
- Atmospheric dispersion corrector

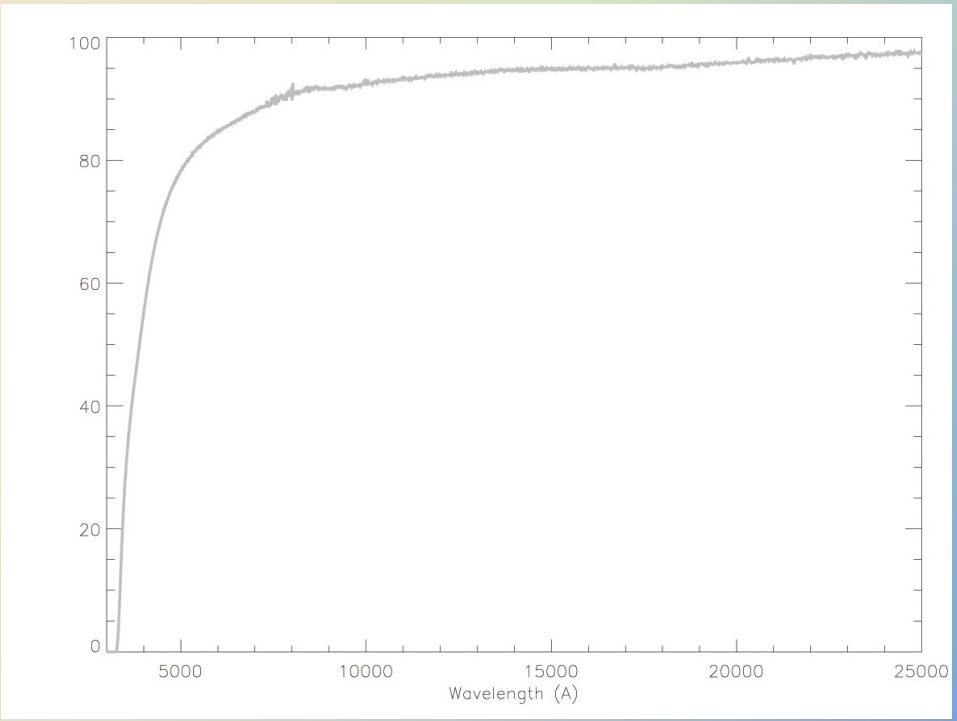

Spectroscopy

- From 3 700 Å to 23 500 Å
  - [OII] 3727/3729 Å at z = 0
  - H-alpha at z = 2.5
  - Extinguished sources
- High efficiency VPH gratings
- Resolution of 3000-4000
  - Look through the NIR sky lines
  - Continuum of faint sources
  - Resolve velocity components in star forming galaxies.
- Long slit of 3 arcminutes
- Atmospheric dispersion corrector

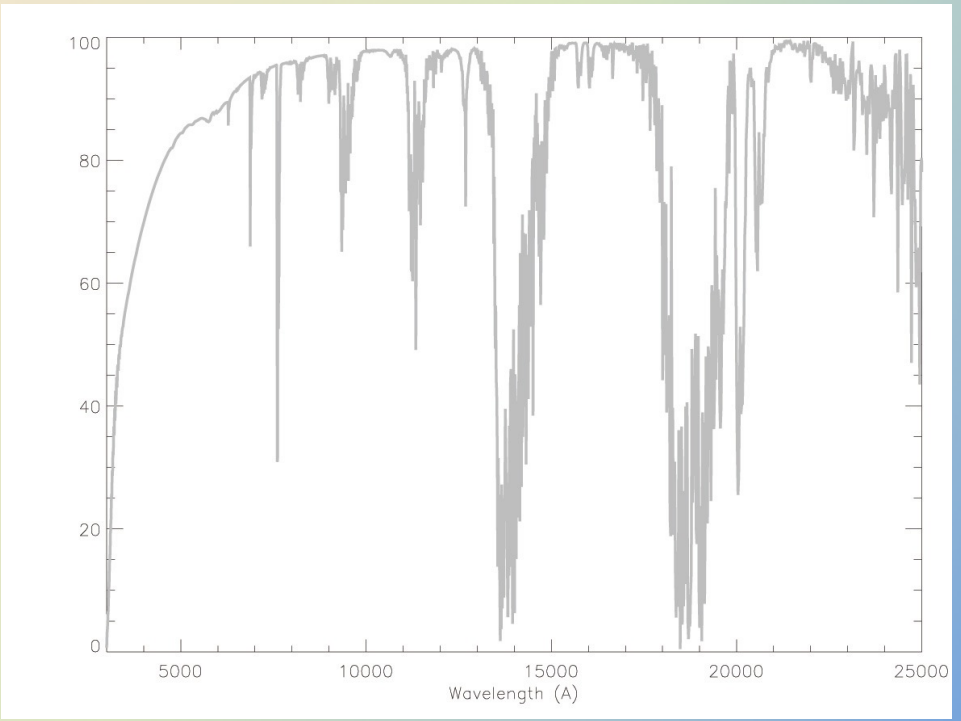

Spectroscopy

- From 3 700 Å to 23 500 Å
  - [OII] 3727/3729 Å at z = 0
  - H-alpha at z = 2.5
  - Extinguished sources
- High efficiency VPH gratings
- Resolution of 3000-4000
  - Look through the NIR sky lines
  - Continuum of faint sources
  - Resolve velocity components in star forming galaxies.
- Long slit of 3 arcminutes
- Atmospheric dispersion corrector

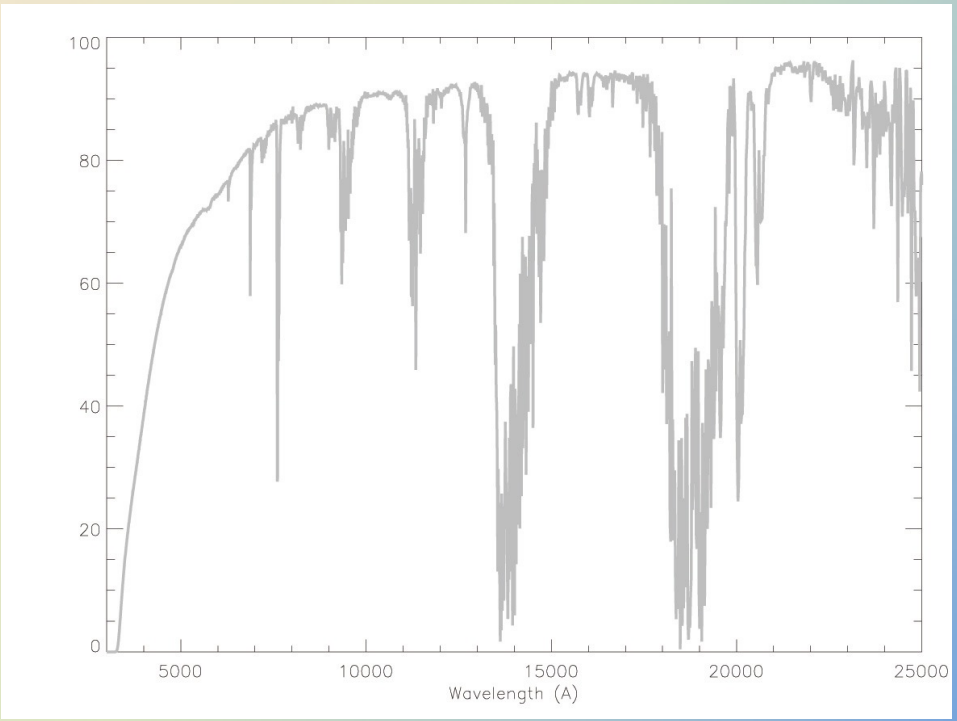

Spectroscopy

- From 3 700 Å to 23 500 Å
  - [OII] 3727/3729 Å at z = 0
  - H-alpha at z = 2.5
  - Extinguished sources
- High efficiency VPH gratings
- Resolution of 3000-4000
  - Look through the NIR sky lines
  - Continuum of faint sources
  - Resolve velocity components in star forming galaxies.
- Long slit of 3 arcminutes
- Atmospheric dispersion corrector

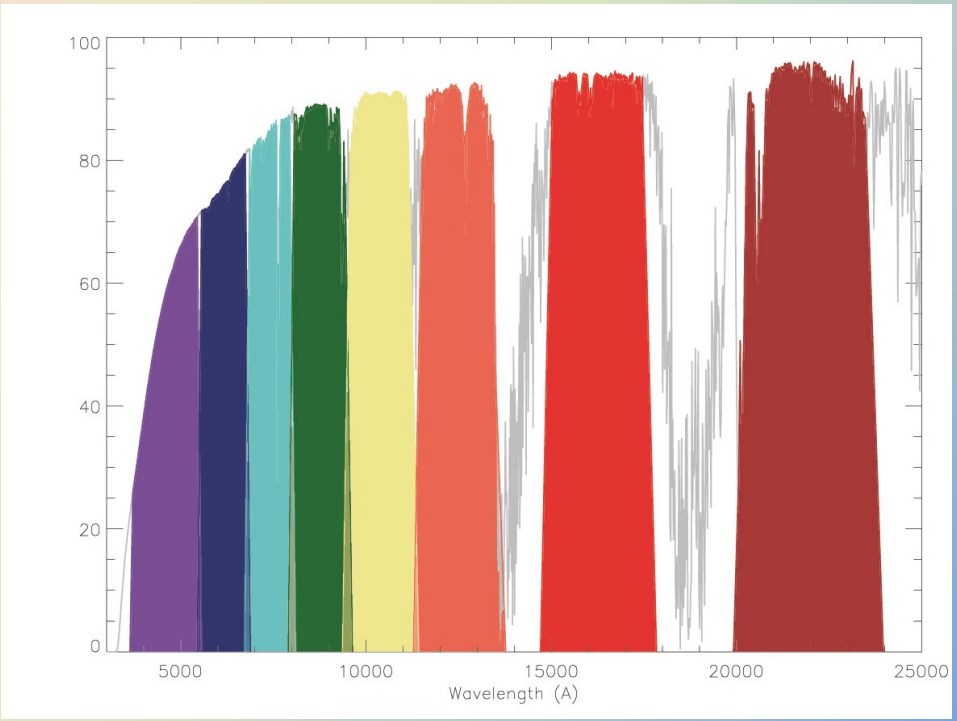

Spectroscopy

- From 3 700 Å to 23 500 Å
  - [OII] 3727/3729 Å at z = 0
  - H-alpha at z = 2.5
  - Extinguished sources
- High efficiency VPH gratings
- Resolution of 3000-4000
  - Look through the NIR sky lines
  - Continuum of faint sources
  - Resolve velocity components in star forming galaxies.
- Long slit of 3 arcminutes
- Atmospheric dispersion corrector

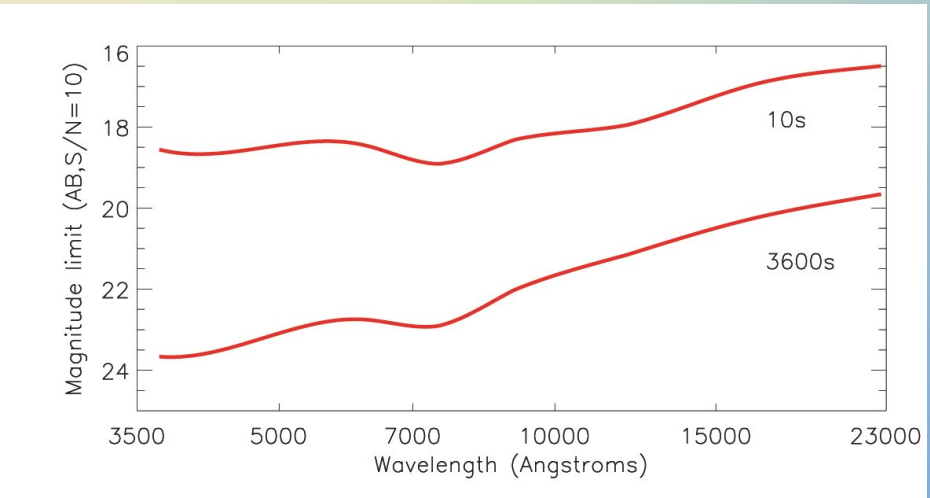

Spectroscopy

- From 3 700 Å to 23 500 Å
  - [OII] 3727/3729 Å at z = 0
  - H-alpha at z = 2.5
  - Extinguished sources
- High efficiency VPH gratings
- Resolution of 3000-4000
  - Look through the NIR sky lines
  - Continuum of faint sources
  - Resolve velocity components in star forming galaxies.
- Long slit of 3 arcminutes
- Atmospheric dispersion corrector

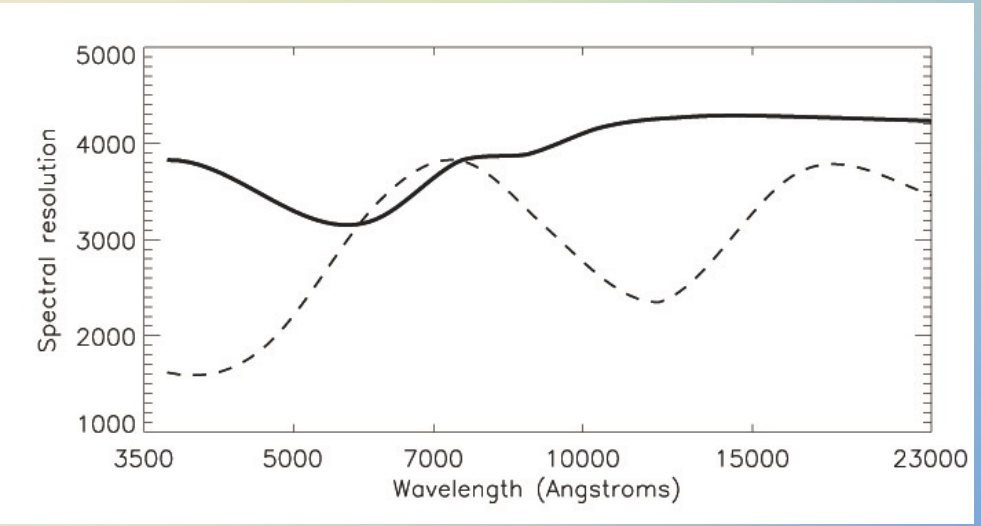

Spectroscopy

- From 3 700 Å to 23 500 Å
  - [OII] 3727/3729 Å at z = 0
  - H-alpha at z = 2.5
  - Extinguished sources
- High efficiency VPH gratings
- Resolution of 3000-4000
  - Look through the NIR sky lines
  - Continuum of faint sources
  - Resolve velocity components in star forming galaxies.
- Long slit of 3 arcminutes
- Atmospheric dispersion corrector

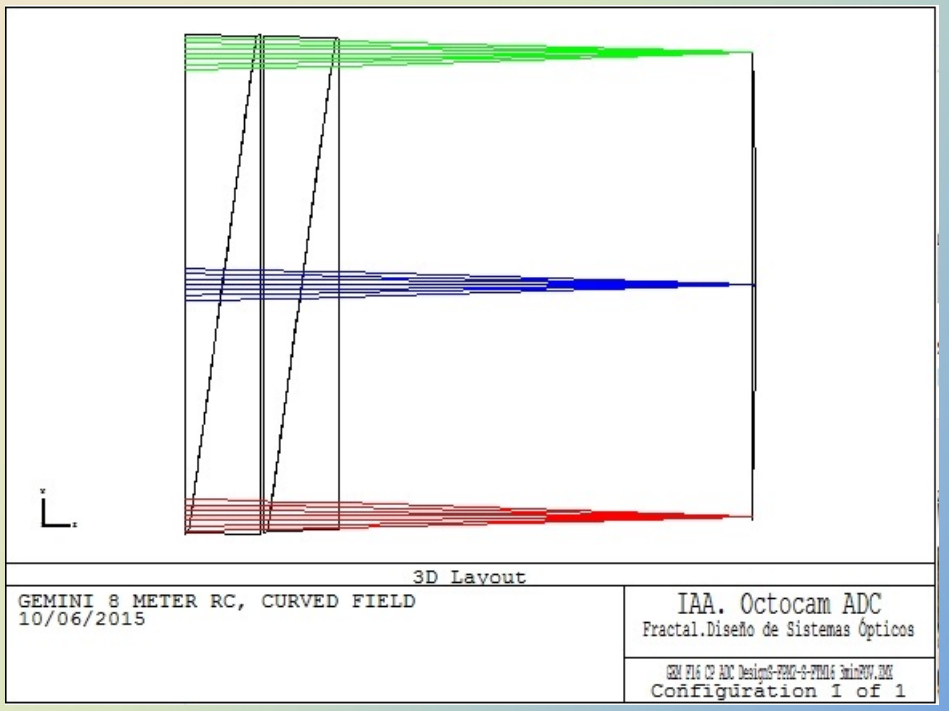

Spectroscopy

- From 3 700 Å to 23 500 Å
  - [OII] 3727/3729 Å at z = 0
  - H-alpha at z = 2.5
  - Extinguished sources
- High efficiency VPH gratings
- Resolution of 3000-4000
  - Look through the NIR sky lines
  - Continuum of faint sources
  - Resolve velocity components in star forming galaxies.
- Long slit of 3 arcminutes
- Atmospheric dispersion corrector

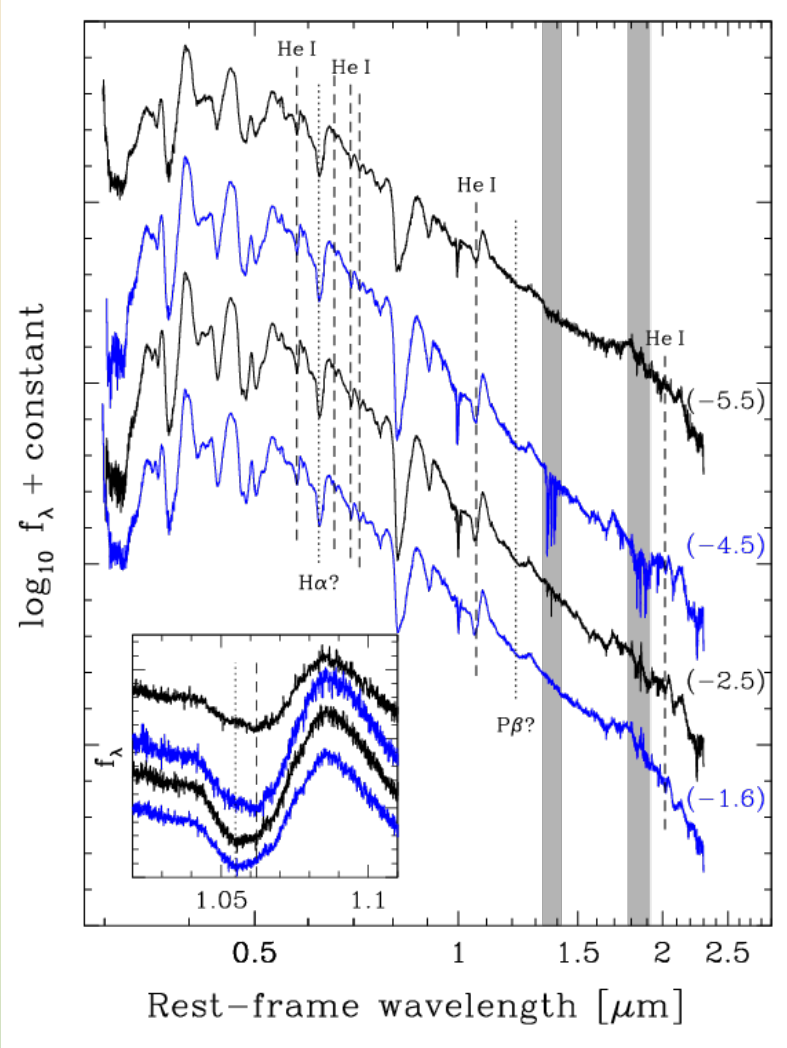

Folatelli et al. 2014

Time resolution

- Optical: Frame transfer detectors
- NIR: H2RG+Sidecar
- No compromise for classical observations
- Negligible readout overheads
- ~10 Hz full frame
- ~100 Hz windowed

✓ XRBs
✓ Magnetars
✓ GRBs
✓ Ocultations
✓ Transits

Time resolution

- Optical: Frame transfer detectors
- NIR: H2RG+Sidecar
- No compromise for classical observations
- Negligible readout overheads
- ~10 Hz full frame
- ~100 Hz windowed

✓ XRBs
✓ Magnetars
✓ GRBs
✓ Occultations
✓ Transits

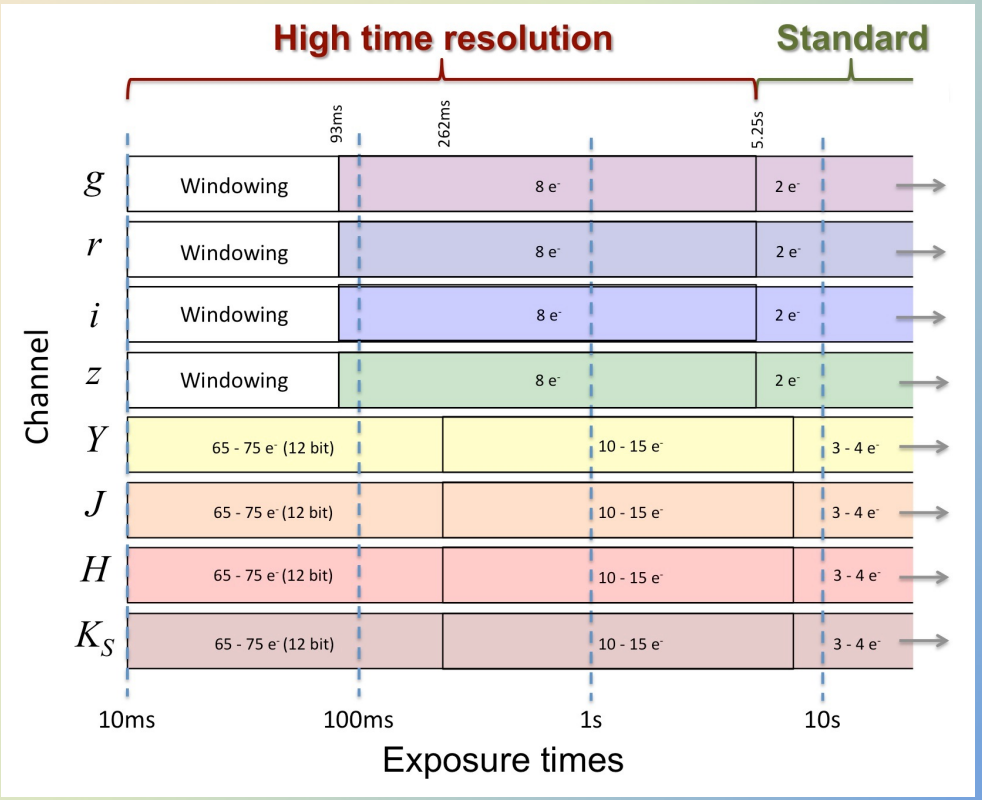

Time resolution

- Optical: Frame transfer detectors
- NIR: H2RG+Sidecar
- No compromise for classical observations
- Negligible readout overheads
- ~10 Hz full frame
- ~100 Hz windowed

✓ XRBs
✓ Magnetars
✓ GRBs
✓ Occultations
✓ Transits

Braga-Ribas et al. 2014

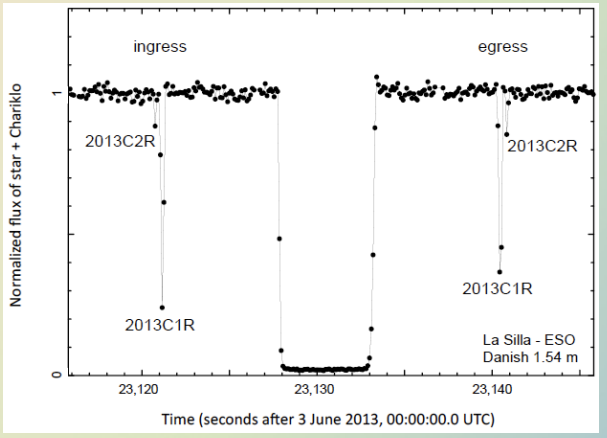

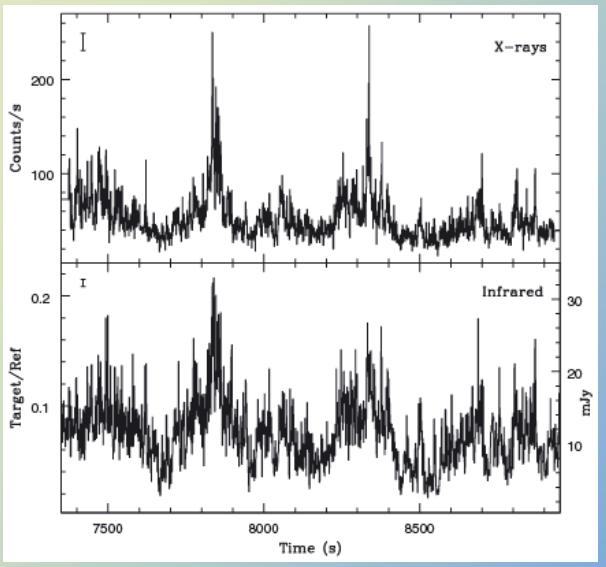

Casella et al. 2010

Spectropolarimeter

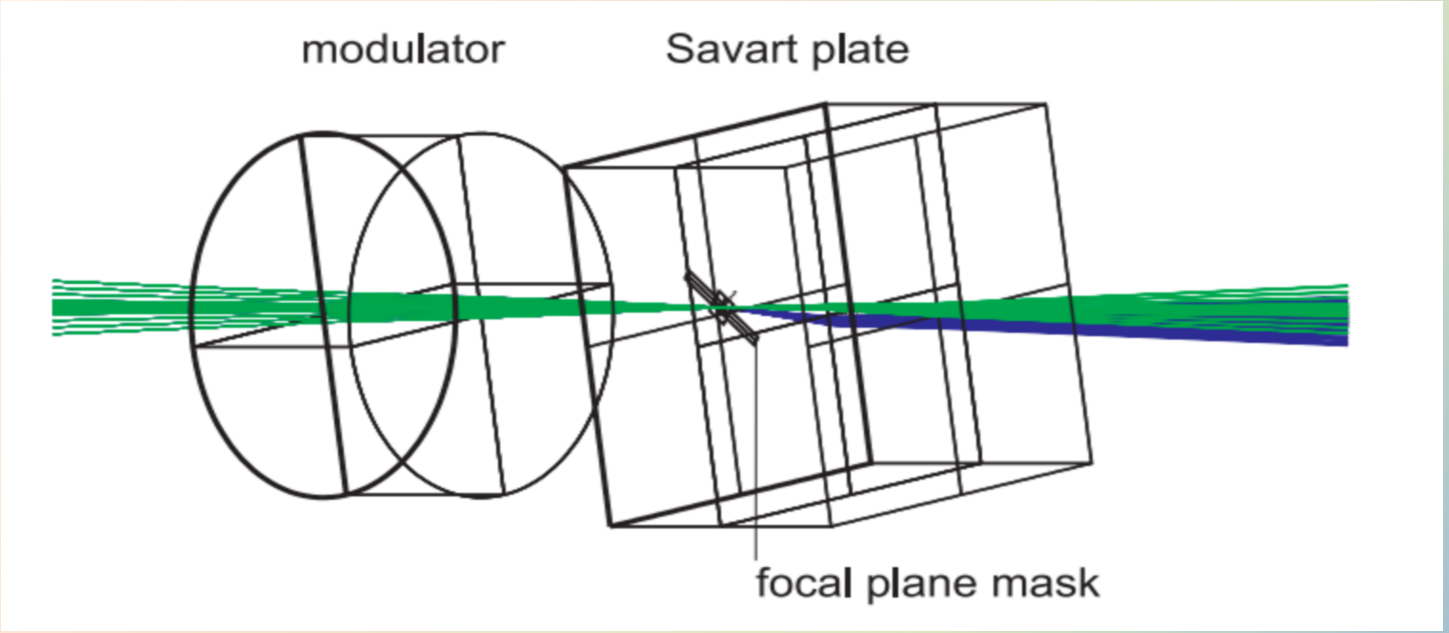

- Based on the design of Snik et al. (2012) for X-shooter

✓ Structure and magnetism in SNe
✓ Stellar physics
✓ Characterization of transients

Spectropolarimeter

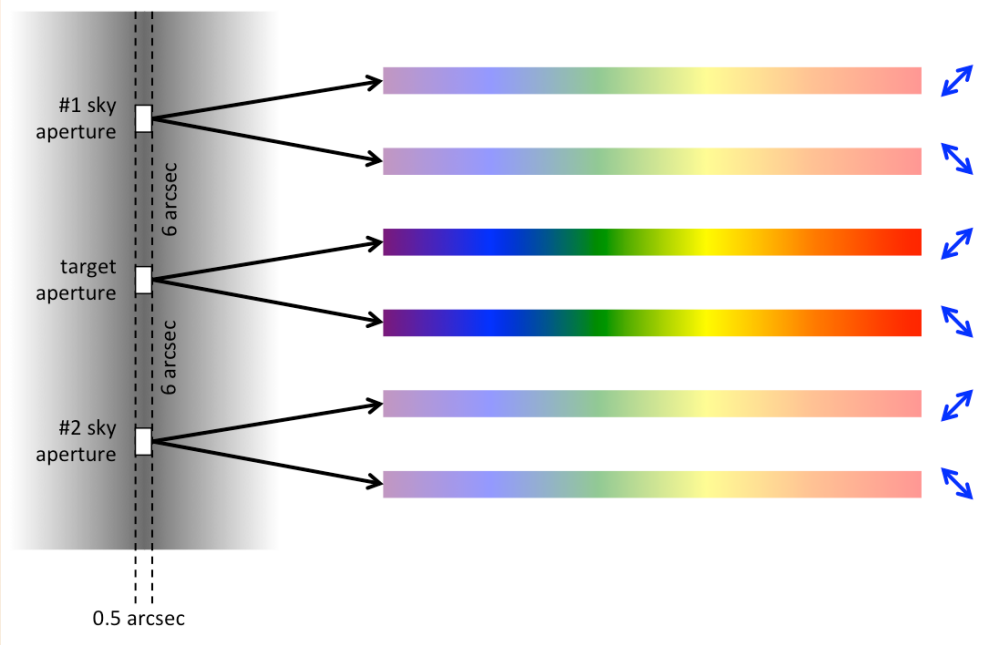

- Based on the design of Snik et al. (2012) for X-shooter

✓ Structure and magnetism in SNe
✓ Stellar physics
✓ Characterization of transients

Spectropolarimeter

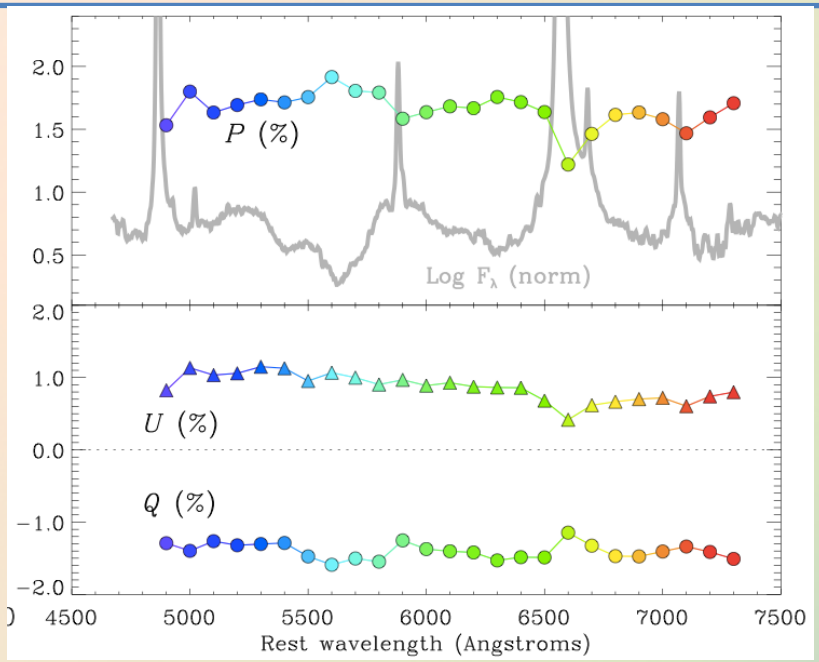

Mauerhan et al. 2014

- Based on the design of Snik et al. (2012) for X-shooter

✓ Structure and magnetism in SNe
✓ Stellar physics
✓ Characterization of transients

Integral field unit (IFU)

- 3’ long slit
- 0.4” resolution elements
- Simple slicer of 9.7”x6.8”
- Full spectral resolution with any seeing condition

- Unique IFU wavelength coverage

✓ GRB & SN host galaxies
✓ Massive star environment
✓ TNO & comets

- An Adaptive Optics IFU?

Integral field unit (IFU)

- 3’ long slit
- 0.4” resolution elements
- Simple slicer of 9.7”x6.8”
- Full spectral resolution with any seeing condition

- Unique IFU wavelength coverage

✓ GRB & SN host galaxies
✓ Massive star environment
✓ TNO & comets

- An Adaptive Optics IFU?

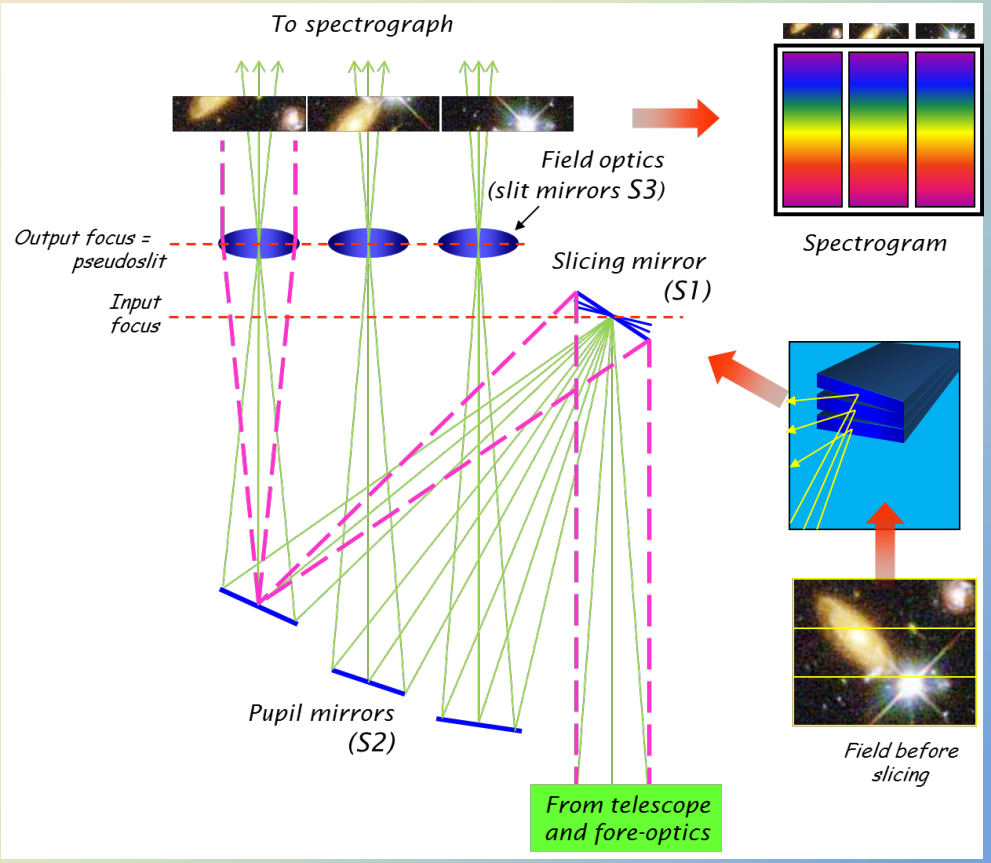

Integral field unit (IFU)

- 3’ long slit
- 0.4” resolution elements
- Simple slicer of 9.7”x6.8”
- Full spectral resolution with any seeing condition



- Unique IFU wavelength coverage

✓ GRB & SN host galaxies
✓ Massive star environment
✓ TNO & comets

- An Adaptive Optics IFU?

Integral field unit (IFU)

- 3’ long slit
- 0.4” resolution elements
- Simple slicer of 9.7”x6.8”
- Full spectral resolution with any seeing condition

- Unique IFU wavelength coverage

✓ GRB & SN host galaxies
✓ Massive star environment
✓ TNO & comets

▪ An Adaptive Optics IFU?

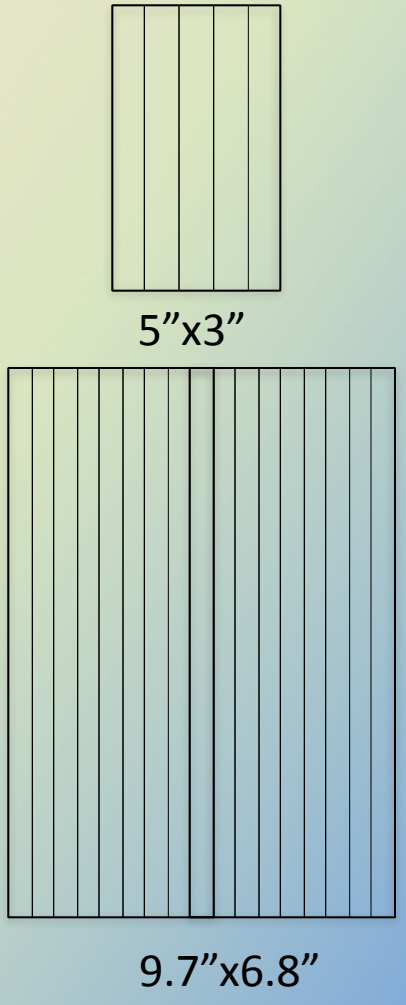

Integral field unit (IFU)

- 3’ long slit
- 0.4” resolution elements
- Simple slicer of 9.7”x6.8”
- Full spectral resolution with any seeing condition

- Unique IFU wavelength coverage

✓ GRB & SN host galaxies
✓ Massive star environment
✓ TNO & comets

- An Adaptive Optics IFU?

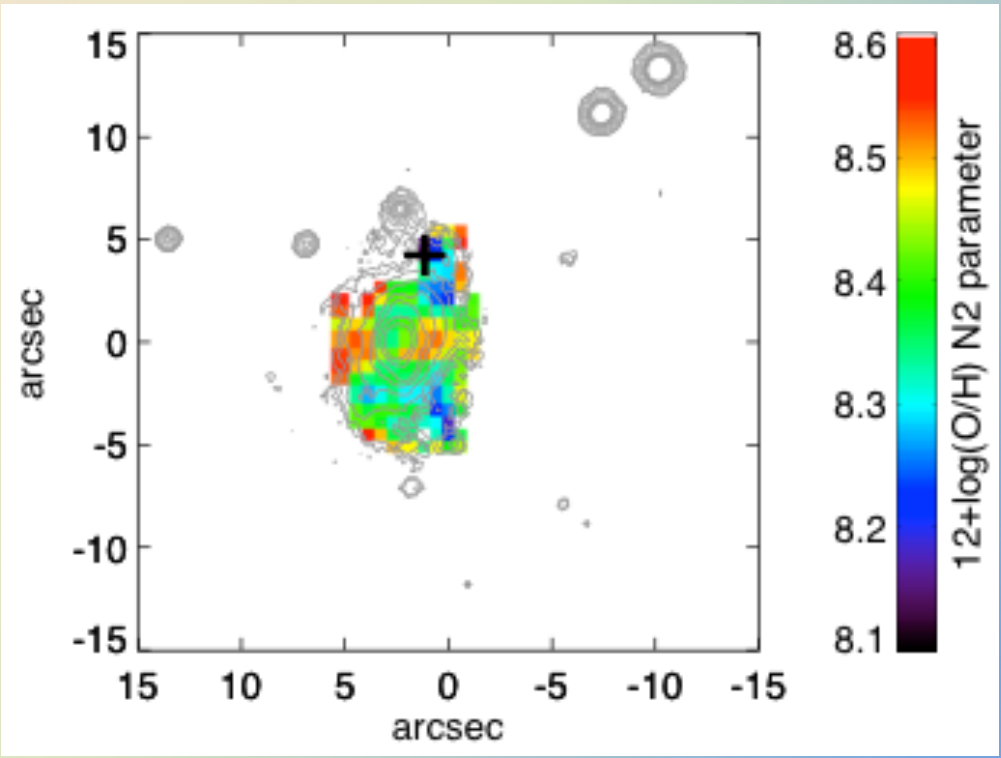

Thöne et al. 2014

Calibrating and maintaining OCTOCAM

- Simple instrument with few moving parts ➔ Few things can give problems
- Fast day-time calibration:
  - Simultaneous calibrations
  - Few modes
- Fast night-time calibrations:
  - Simultaneous standard star observations
  - Negligible instrument overheads
- Very reliable flux calibration:
  - The 8-band acquisition allows a solid calibration including differential slit losses
- Simple pipeline: Imaging and long slit spectroscopy.

Sometime in 2022 …

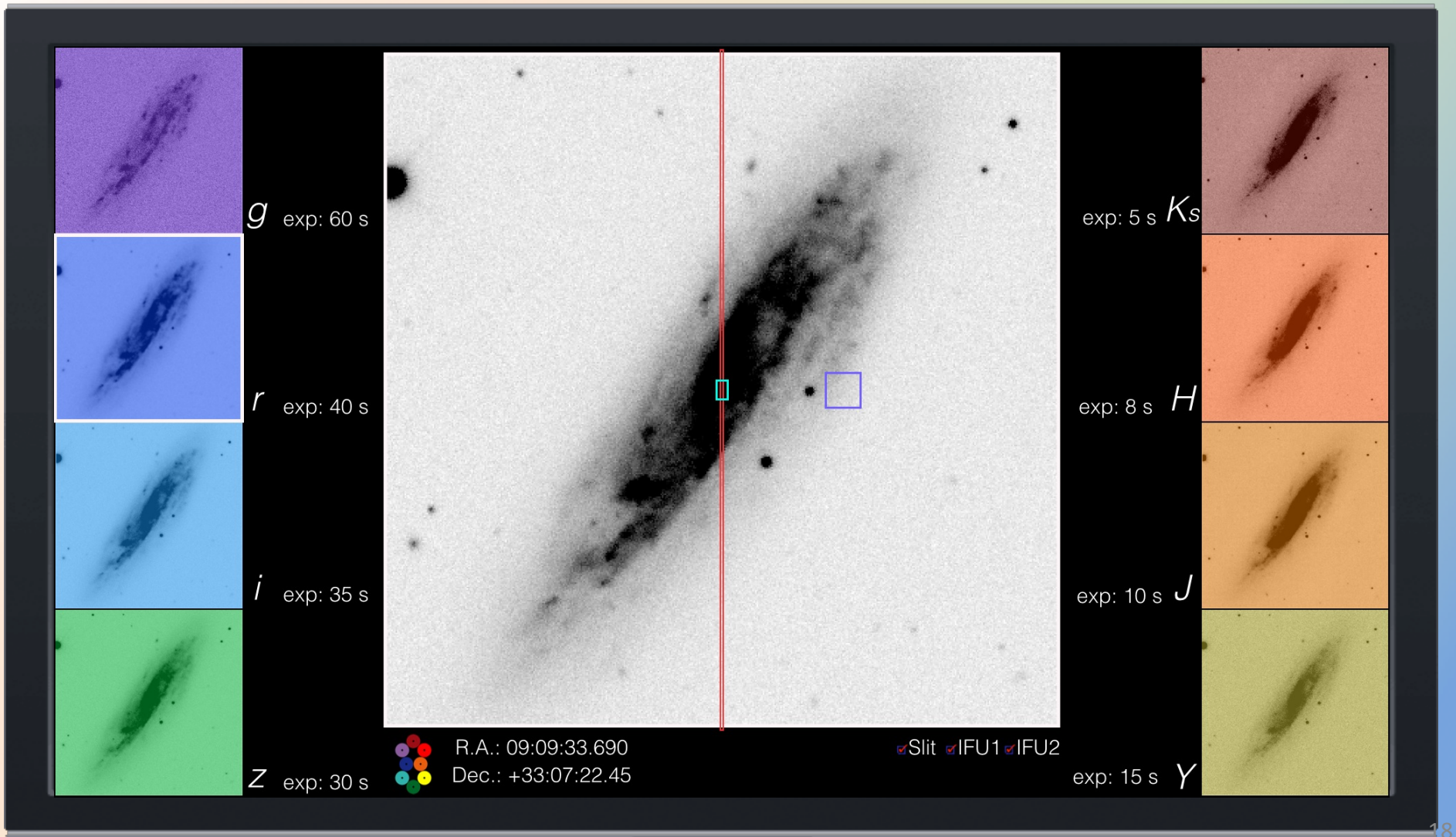

Sometime in 2022 …

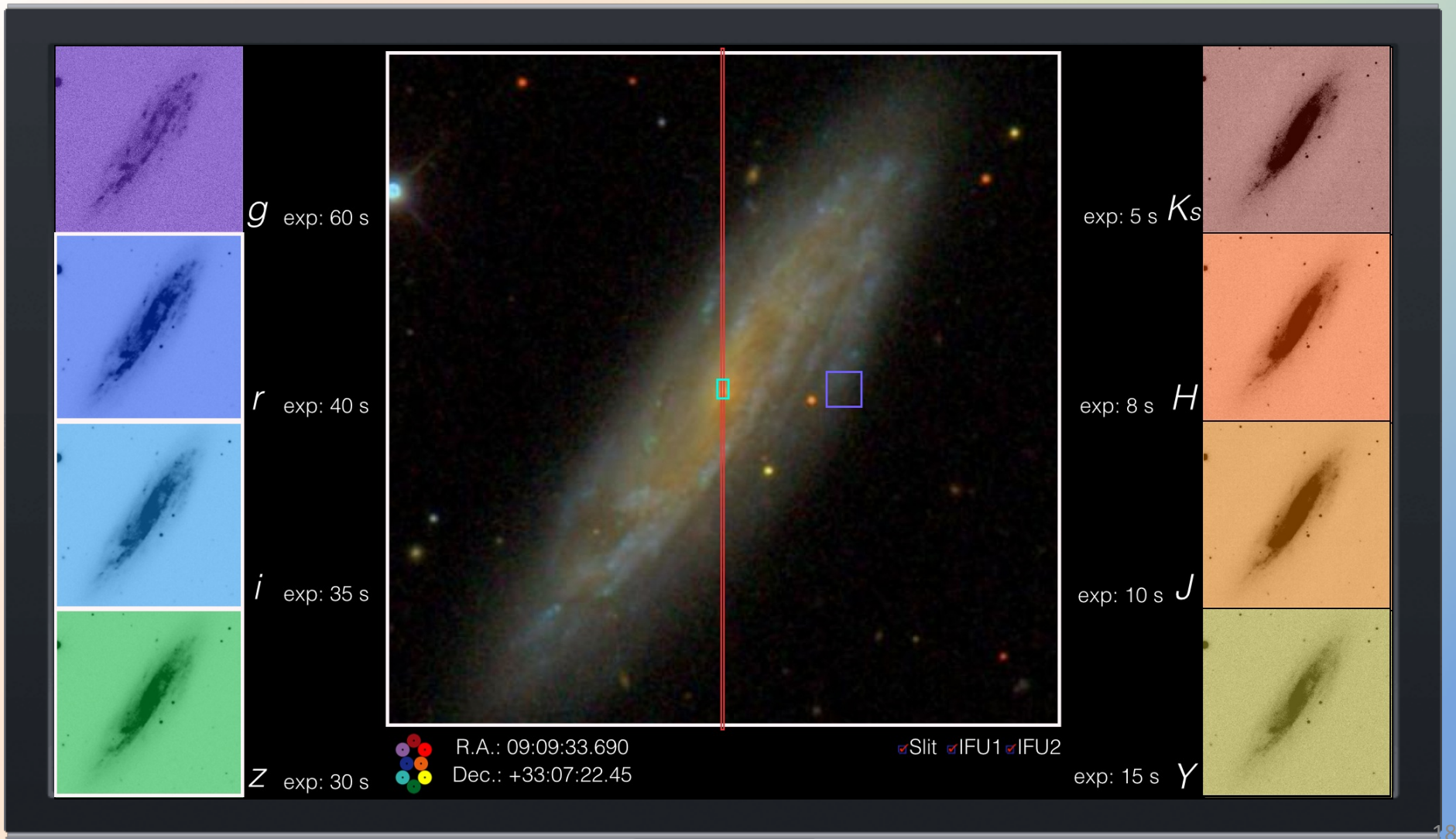

Sometime in 2022 …

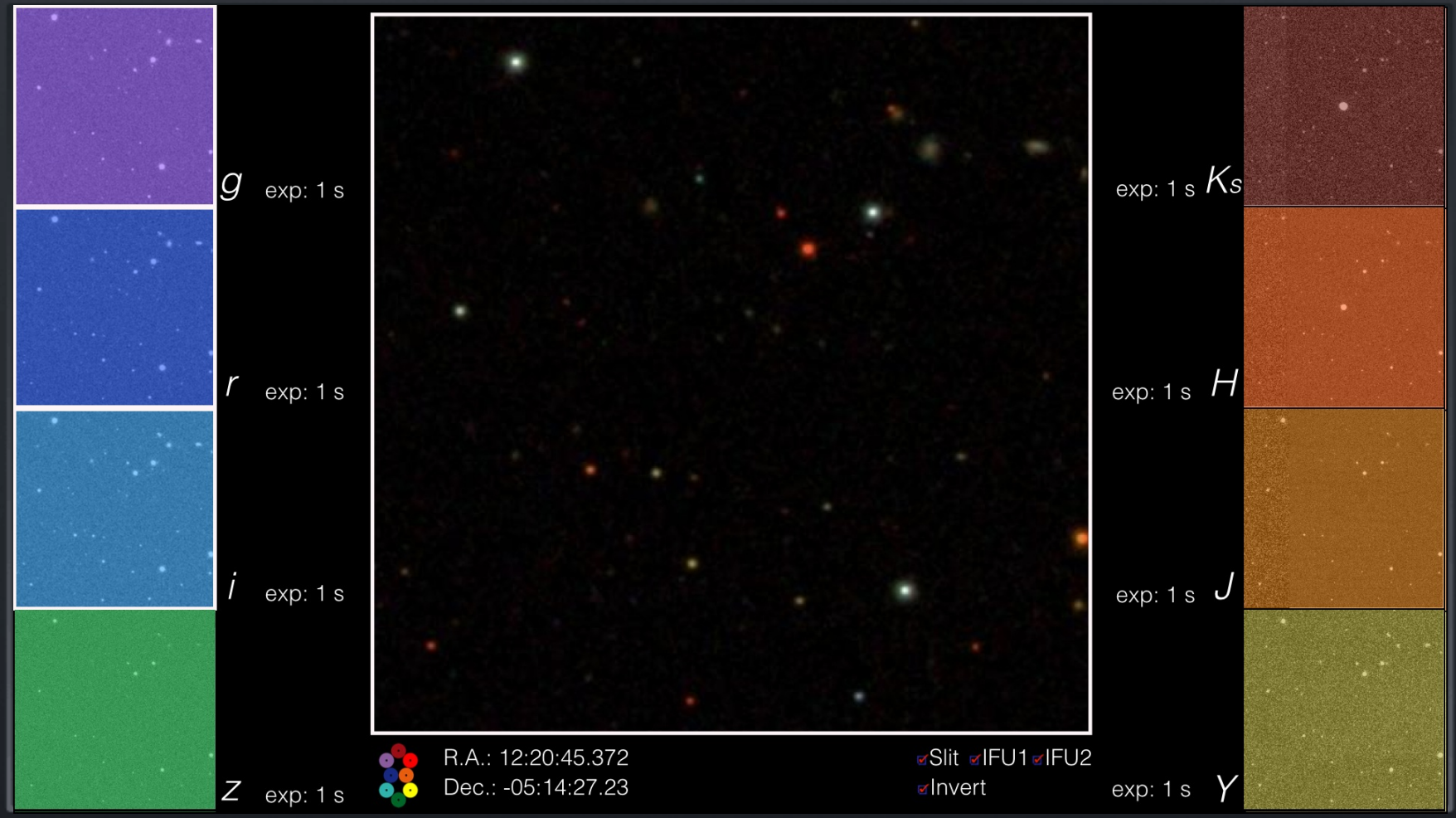

Sometime in 2022 …

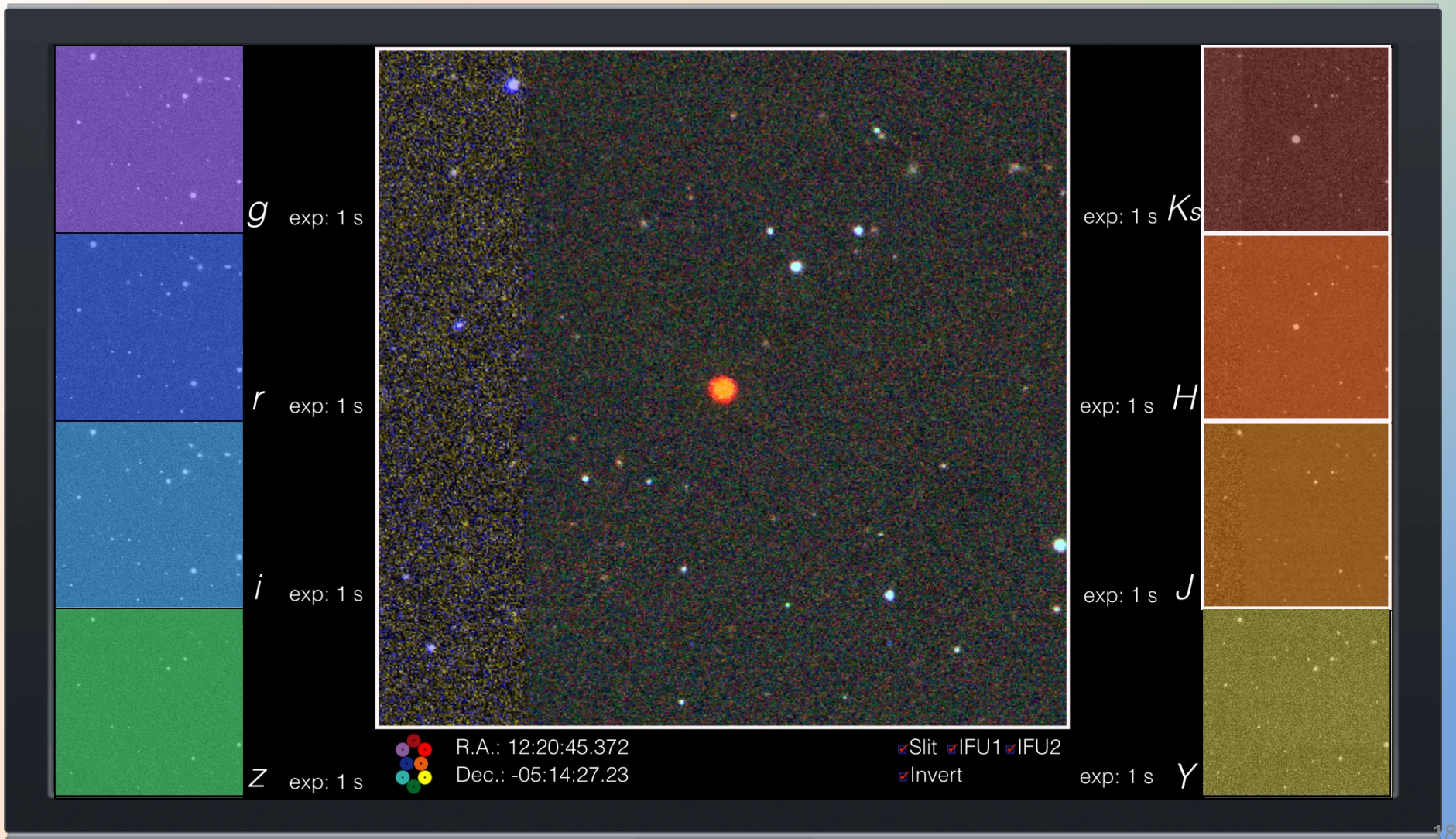

Sometime in 2022 …

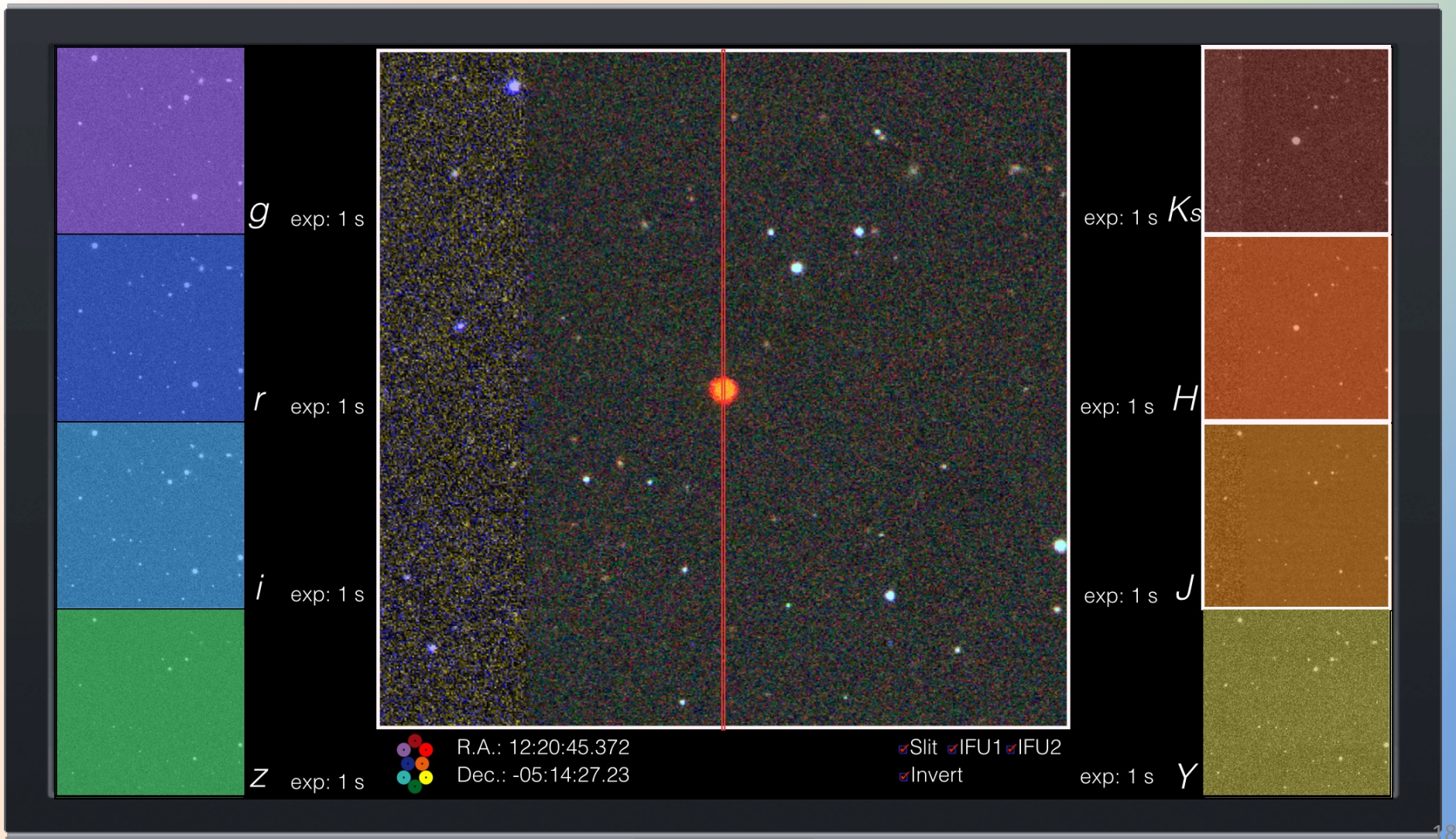

Sometime in 2022 …

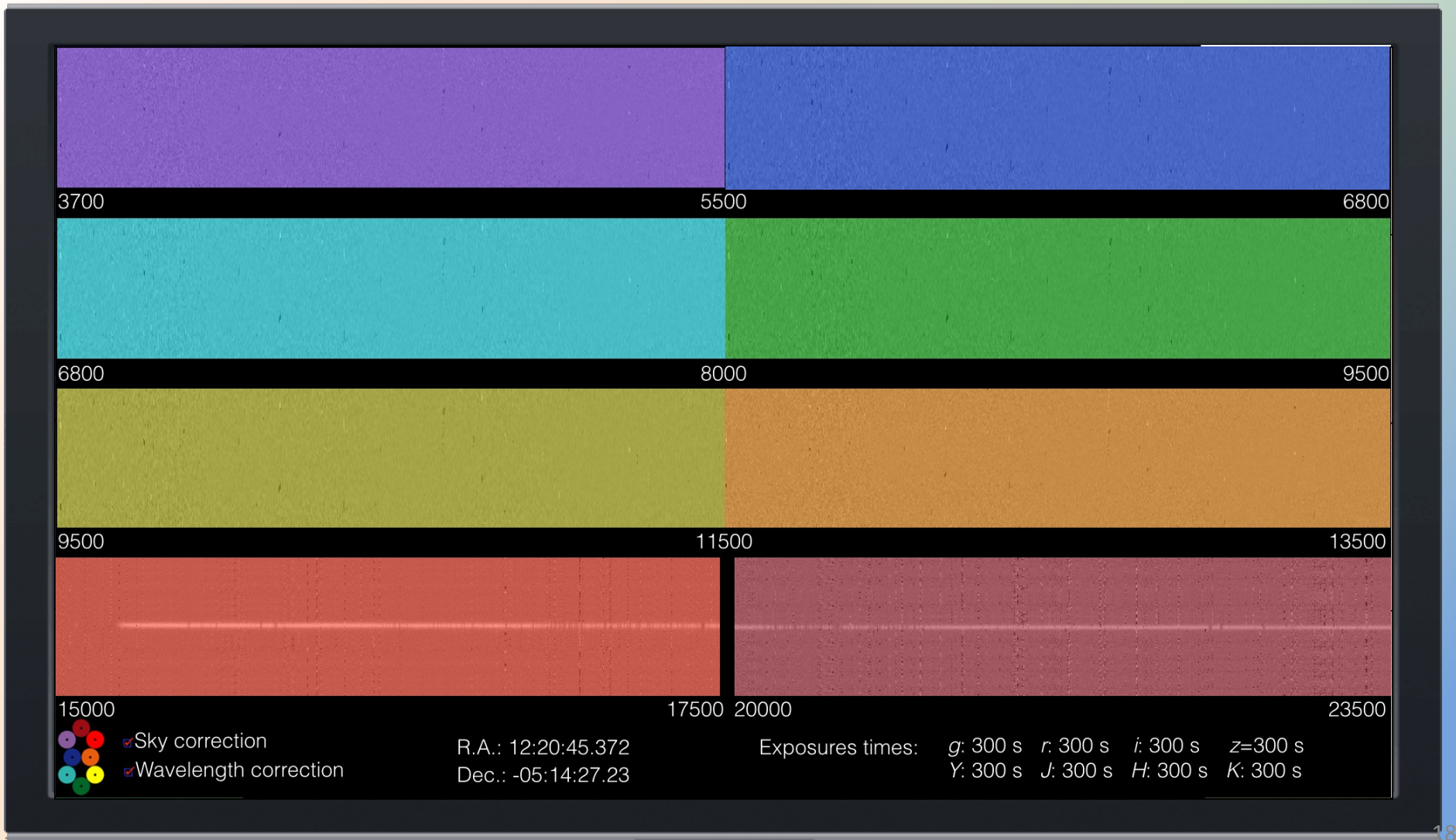

Sometime in 2022 …

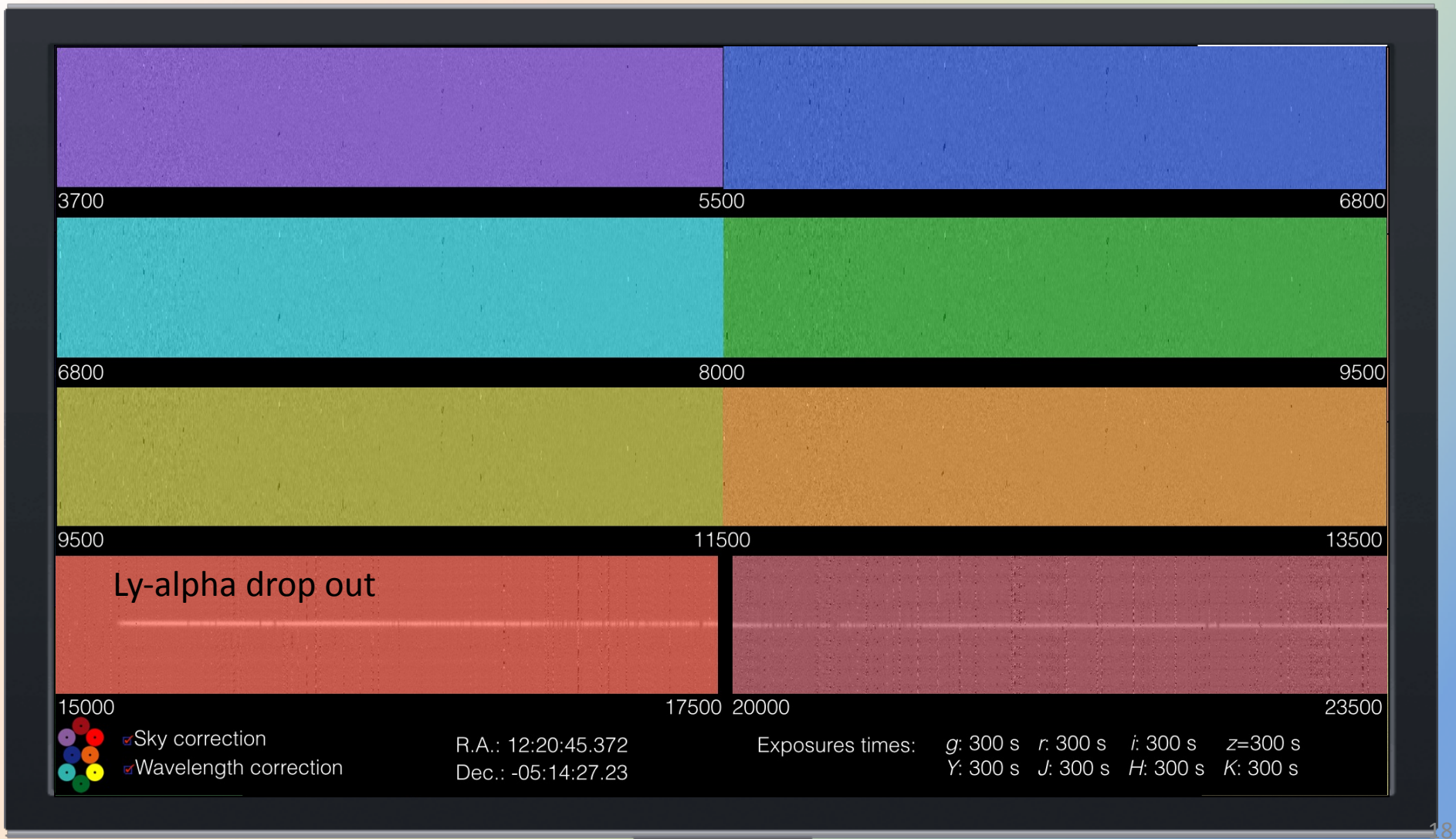

Sometime in 2022 …

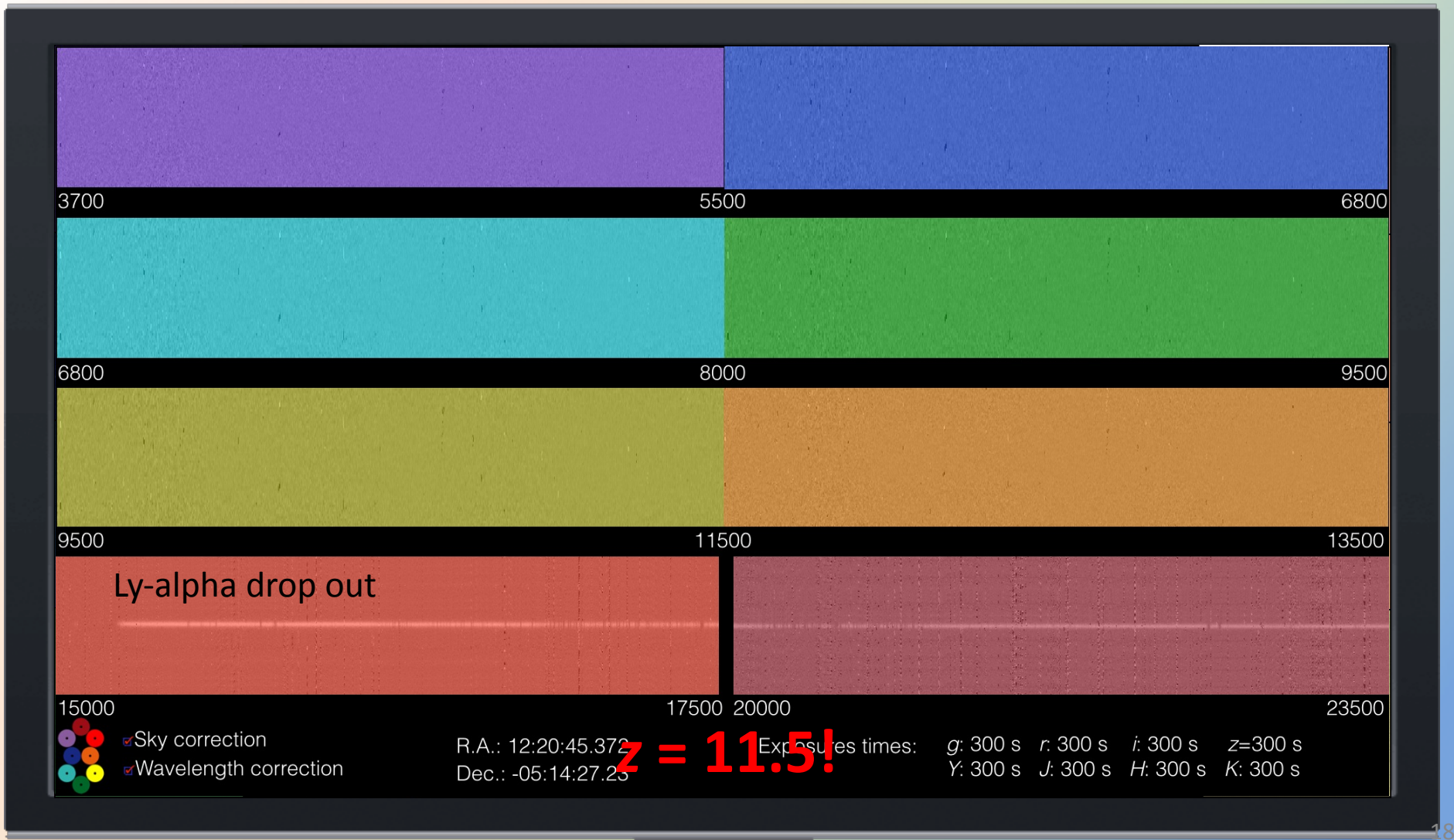

OCTOCAM specifications

Simultaneous spectral range	Photometry: *grizYJHK* Spectroscopy: 3700-23500 Å
Field of view	***Imaging: 3'x3'*** ***Spectroscopy: 3' Long slit*** ***9.7"x6.8" IFU***
Plate scale	0.18"/pixel
Spectral resolution	*3 000 - 4 000* ***standard VPH***
Expected efficiency	Imaging: ~41% Spectroscopy: ~33%
Maximum full-frame rate	***~ 10 Hz full frame - ~ 100 Hz windowed***
Observing modes	Multiband imaging Wide band spectroscopy (long slit, IFU) High time-resolution Spectropolarimetry

OCTOCAM

Thank you!

Science with OCTOCAM

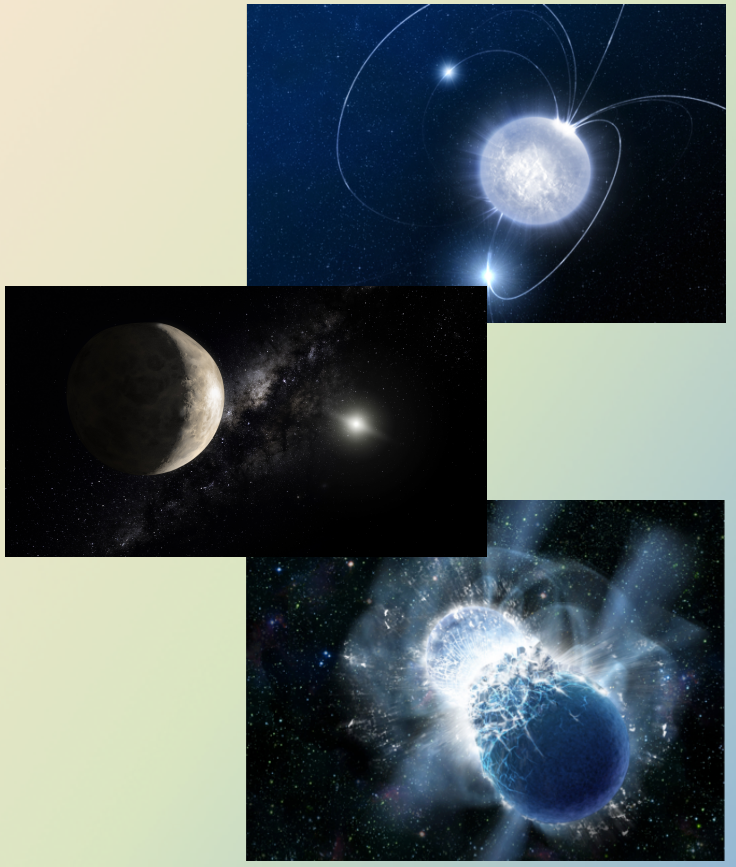

Alexander J. van der Horst
(GWU)

Science with OCTOCAM

- Simultaneous optical-nIR multiband photometry, optical-nIR spectroscopy, and time domain astronomy
- Uncovered region of observational space: *temporal resolution – spectral coverage – spectral resolution*
- Broad range of scientific topics (18 in total)
- Different communities with diverse needs
- Large and diverse science team (46 members)
- Scientific requirements drive the instrument design

Science Team

- 18 broad science topics, 46 science team members
- Scientists within and outside the Gemini community
- Propose science cases and fundamental questions
- Define scientific requirements to answer these questions
- Consider instrument additions (IFU, spectropolarimetry)
- Communication is key:
  - Science team surveys
  - Discussions with subgroups and individuals

Science Team Members I

- Álvaro Álvarez-Candal, Observatório Nacional, Brazil
- Rodolfo Angeloni, Gemini Observatory, Chile
- Stefano Bagnulo, Armagh Observatory, UK
- Franz Bauer, Pontificia Universidad Católica, Chile
- Amanda Bayless, Southwest Research Institute, USA
- Melina Bersten, Universidad de la Plata, Argentina
- Marcelo Borges Fernandes, Observatório Nacional, Brazil
- Tom Broadhurst, Universidad del País Vasco, Spain
- Nat Butler, Arizona State University, USA
- Brad Cenko, NASA Goddard Space Flight Center, USA
- Lydia Cidale, Observatorio Astronomico de la Plata, Argentina
- Jesus Corral-Santana, Pontificia Universidad Católica, Chile
- Peter Curran, International Center for Radio Astronomy Research, Australia
- Vik Dhillon, University of Sheffield, UK
- René Duffard, Instituto de Astrofísica de Andalucía - CSIC, Spain
- Robert Fesen, Dartmouth College, USA
- Gastón Folatelli, Universidad de la Plata, Argentina
- Jonathan Fortney, University of California Santa Cruz, USA
- Ori Fox, University of California Berkeley, USA
- Anna Frebel, Massachusetts Institute of Technology, USA
- Lluís Galbany, Universidad de Chile, Chile
- Rafael Garrido Haba, Instituto de Astrofísica de Andalucía - CSIC, Spain
- Daryl Haggard, Amherst College, USA

Science Team Members II

- Eric Hintz, Bringham Young University, USA
- David Kaplan, University of Wisconsin-Milwaukee, USA
- Oleg Kargaltsev, George Washington University, USA
- Chryssa Kouveliotou, George Washington University, USA
- Adam Kraus, University of Texas at Austin, USA
- Michaela Kraus, Astronomický ústav, Akademie věd České republiky, Czech Republic
- Ho-Gyu Lee, Korea Astronomy and Space Science Institute, South Korea
- Chris Lidman, Australian Astronomical Observatory, Australia
- Teo Muñoz-Darias, Instituto de Astrofísica de Canarias, Spain
- Jerome Orosz, San Diego State University, USA
- Thomas Pannuti, Morehead State University, USA
- Jennifer Patience, Arizona State University, USA
- Daniel Perley, California Institute of Technology, USA
- Noemí Pinilla-Alonso, University of Tennessee, USA
- Brian Schmidt, Australian National University, Australia
- Steve Schulze, Pontificia Universidad Católica, Chile
- Denise Stephens, Brigham Young University, USA
- Juan Carlos Suárez, Universidad de Granada, Spain
- Nial Tanvir, University of Leicester, UK
- Ezequiel Treister, Universidad de Concepción, Chile
- Daniel Vanden Berk, St. Vincent College, USA
- Sjoert van Velzen, Johns Hopkins University, USA
- Stefanie Wachter, Max-Planck-Institut für Astronomie, Germany

Subgroups per Science Topic

- *Trans-Neptunian objects*: Álvarez-Candal, Duffard, Pinilla-Alonso, Stephens
- *Extrasolar planets*: Fortney, Patience, Stephens
- *Asteroseismology*: Garrido Haba, Hintz, Suárez
- *Massive stars*: Borges Fernandes, Cidale, M. Kraus, Wachter
- *Brown dwarfs*: Fortney, Patience, Stephens
- *Low-mass binaries*: Bayless, A. Kraus, Orosz
- *Low-metallicity stars:* Frebel
- *Isolated neutron stars*: Kaplan, Kargaltsev, Wachter
- *Magnetars*: de Ugarte Postigo, Kaplan, Kouveliotou, van der Horst, Wachter
- *Interacting binaries:* Angeloni, Orosz
- *Millisecond pulsar binaries:* Dhillon
- *X-ray binaries*: Bauer, Bayless, Corral-Santana, Curran, Hintz, Muñoz-Darias, Orosz, Wachter
- *Supernovae*: Bauer, Bayless, Bauer, Bersten, Cenko, Folatelli, Fox, Galbany, Perley, Roming, Schmidt, Schulze, Thöne
- *Supernova remnants*: Fesen, Pannuti, Lee
- *Gamma-ray bursts*: Butler, Cenko, de Ugarte Postigo, Fox, Kouveliotou, Perley, Roming, Schulze, Tanvir, Thöne, Vanden Berk, van der Horst
- *Active galactic nuclei*: Bauer, Butler, Haggard, Treister, Vanden Berk
- *Tidal disruption events*: Cenko, Tanvir, van Velzen
- *Galaxy clusters*: Broadhurst

Science Team Surveys I

- What are the most important questions that an instrument like OCTOCAM would be able to answer in the 2020s astronomical/instrumentation landscape? What would the potential impact be if those questions are answered?
- What is the estimated number of hours needed to complete the science cases?
- What kind of observing conditions are necessary?
- How short does the response time need to be?
- What is the minimum time-resolution necessary?
- What would be the ideal field of view and plate scale?

Science Team Surveys II

- What is the optimal spectral resolution: ~4000-5000 or higher/lower?
- Which imaging bands (grizYJHK) are necessary/useful?
- What wavelength range (within 370-2350 nm) is necessary/useful?
- Is *u*-band spectroscopy necessary? Or would *g*-band spectroscopy, down to 370 or 400 nm, be sufficient?
- How relevant/crucial would adding echelle grisms be?
- How relevant/crucial is adding a spectropolarimetry unit?
- How relevant/crucial is adding an IFU of ~10“x10“?

Science Team Surveys III

- Indicate the importance of the following capabilities of an instrument like OCTOCAM (grade between 1 and 5):
  - Multi-band imaging
  - Multi-wavelength spectroscopy
  - Time resolution
  - Spectropolarimetry
  - Integral Field Unit spectroscopy

Science Cases

- Characterize transient sources discovered/detected with high-cadence optical, radio, X-ray & gamma-ray surveys
- Advance our understanding of extreme physics by observing neutron stars and black hole accretion
- Study the first generation of stars and their environments by observing the first gamma-ray bursts at redshift > 10
- Follow the evolution of the Universe throughout cosmological times by observing galaxies at all redshifts
- Characterize exoplanets, their solar systems, and their atmospheres
- Look for the origin of our solar system in comets, asteroids and Trans-Neptunian objects

Trans-Neptunian Objects

Search for ices, unveiling their surface composition, structure, and potential companions and atmospheres.

- Time resolution & simultaneity → avoid rotational uncertainties
- Time resolution & broadband photometry → stellar occultations
- Time resolution & broadband spectroscopy → continuous flux-calibrated spectra

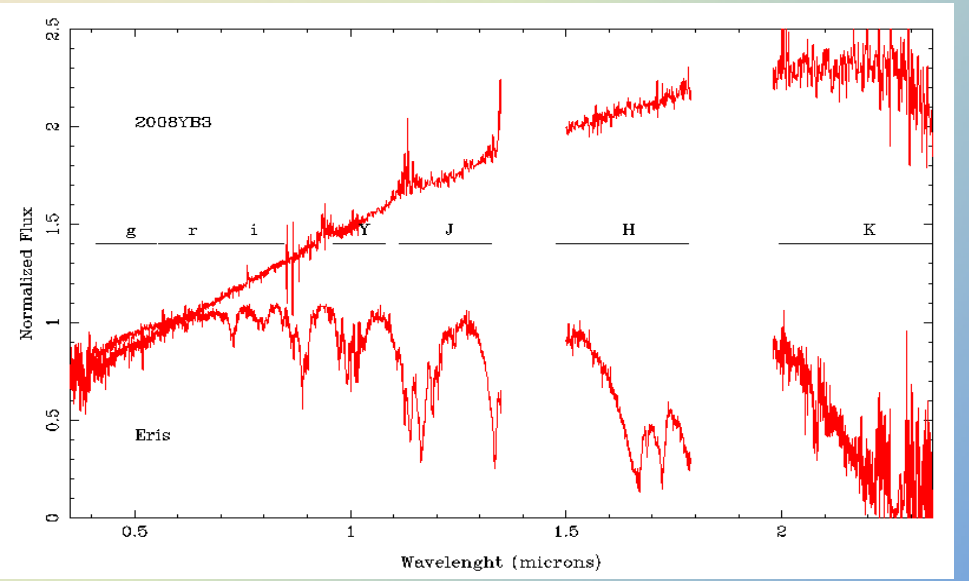

Dwarf planet with CH4 ice absorption features (Alvarez-Candal et al. 2011), and centaur with no apparent features (Pinilla-Alonso et al. 2013).

Extrasolar Planets

Identify and characterize transiting exoplanets, to determine their mass, density, and composition of their atmospheres.

- Identification with high time resolution plus broadband photometry → detect low-mass planets and measure sizes
- Broadband photometry and spectroscopy for characterizing atmospheres

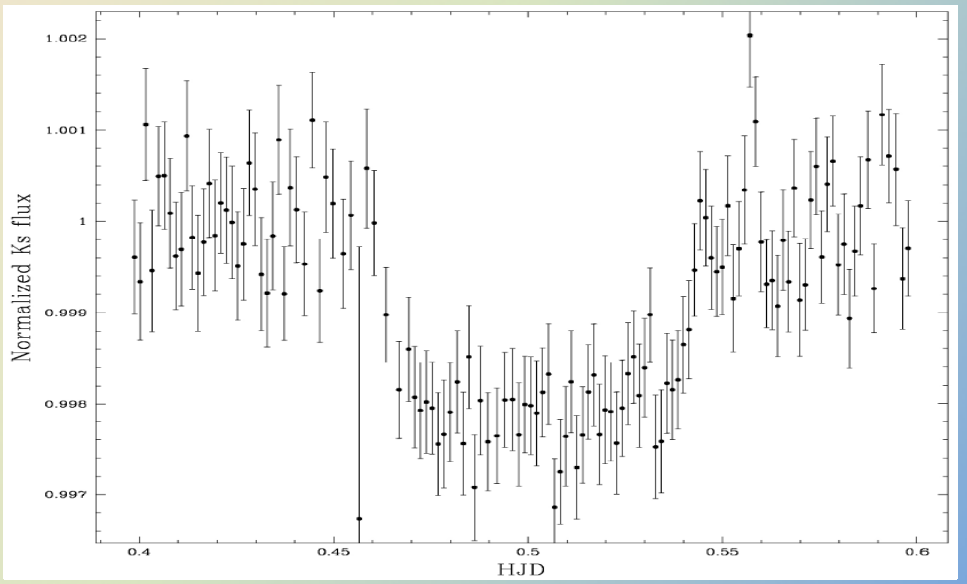

Secondary transit of WASP-4b in K-band (Caceres et al. 2011)

Asteroseismology

Unveil the internal structure and radii of stars.

- Stellar pulsation modes depend strongly on wavelength → high time resolution, broadband photometry & sensitivity → stellar structure models
- Photometry & spectroscopy → Radius measurements → distance estimates

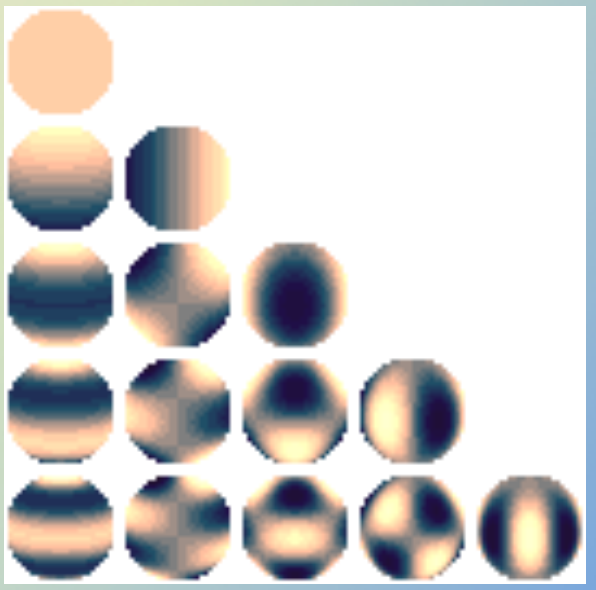

Spherical harmonics of stellar pulsations

Massive Stars

Pin down the origin and time development of variability and mass loss in specific short-lived phases in their evolution.

- Strong variability in photometry and spectroscopy → structure and evolution of ejecta, and physical processes inside stars
- Massive stars in transition phases rare → search in other galaxies → sensitivity & nIR spectroscopy

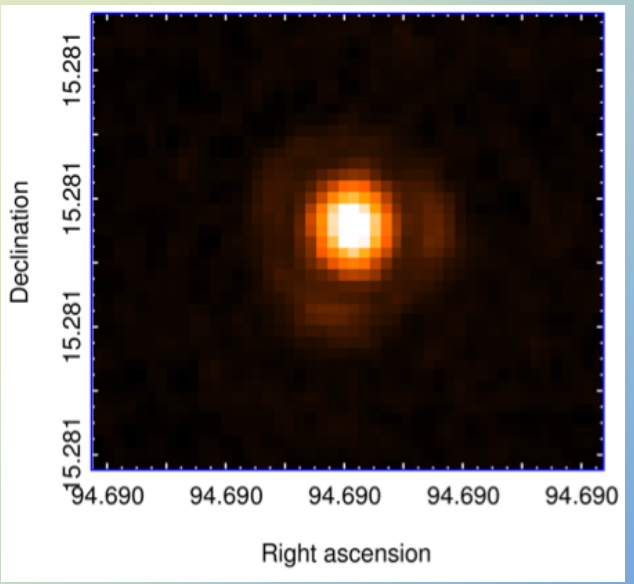

IFU image showing a double-ring structure around a B[e] supergiant (Kraus et al., in prep.)

Brown Dwarfs

Investigate the composition of their atmospheres and the role of clouds on their opacity.

- Uneven cloud cover and stellar rotation → variable photometry/spectroscopy
- Clouds dominate in nIR
- Different causes of variability → simultaneity

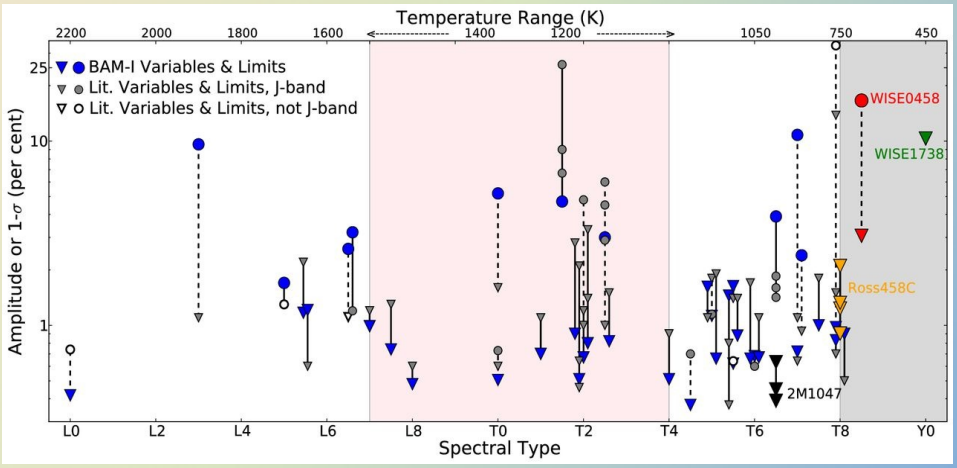

Variability amplitude as a function of spectral type (Rajan et al. 2015)

Low-Mass Binaries

Verify stellar evolution by accurately measuring the masses and radii of stars in eclipsing low-mass binary systems.

- Inflated stars → multi-wavelength plus time resolution necessary
- Study eclipses → geometry & photospheres
- Radial velocity curves → sensitivity & nIR

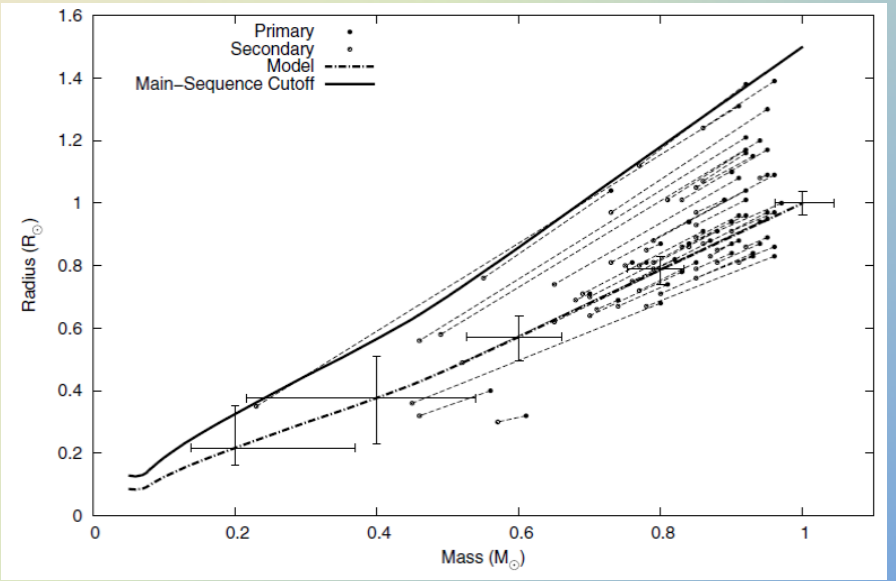

Discrepancy between observed radii and radii from stellar evolution models (Coughlin et al. 2011)

Low-Metallicity Stars

Ascertain the nature of carbon-enhanced low-metallicity stars and their connection with the first stars in the Universe.

- Spectroscopy → search for more sources and fill the abundance ratio gaps
- Establish metallicity and carbon abundance spreads and frequencies

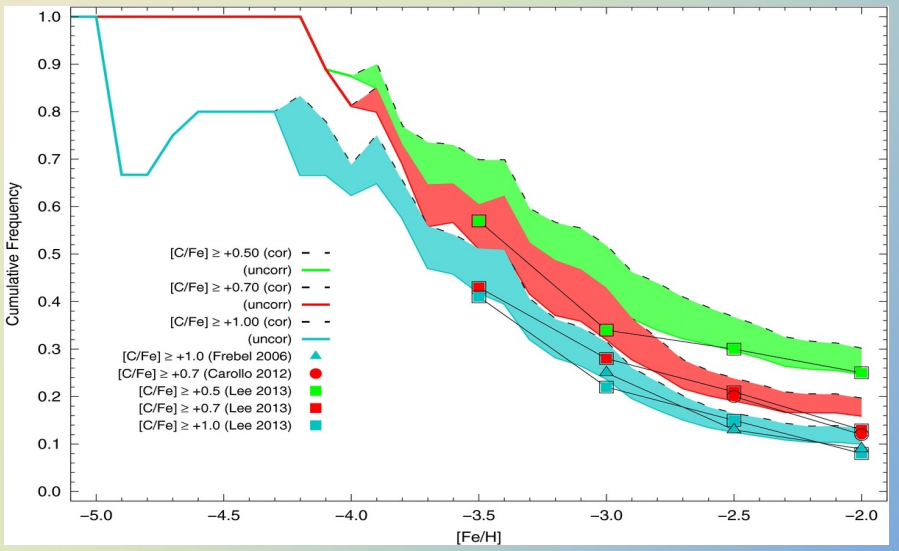

Strong increase in frequency of carbon-enhanced metal-poor stars with decreasing metallicity (Placco et al. 2014)

Isolated Neutron Stars

Elucidate their formation and evolution, and constrain the properties of their atmospheres and magnetospheres.

- Time resolution & sensitivity → pulsed versus unpulsed emission
- Phase-resolved photometry → properties of magnetospheres
- Broadband → physical processes
- Spectral features → magnetic field measurements

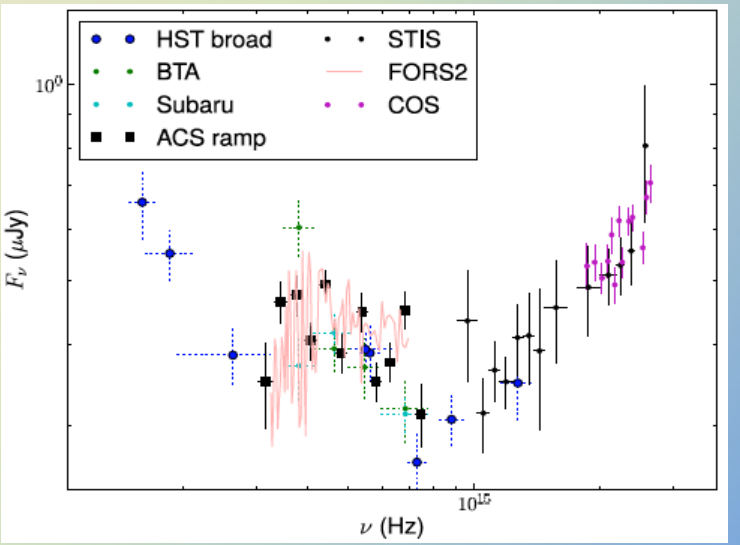

UV-to-nIR spectrum of a pulsar (Durant et al. 2001)

Magnetars

Determine their emission origin and mechanisms.

- Mainly in Galactic plane & crowded regions → nIR
- Timing studies during X-ray outbursts → model constraints, magnetosphere versus disk
- Spectral studies unexplored

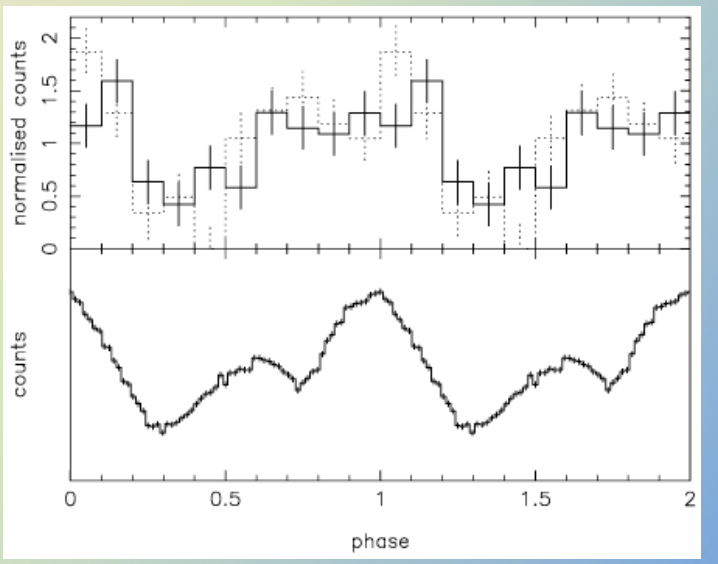

Optical and X-ray pulse profile of a magnetar (Dhillon et al. 2005)

Interacting Binaries

Study the physics of accretion streams and disks.

- Simultaneous broadband photometry → white dwarf magnetosphere, magnetic character of companion, mass transfer rate
- Sensitivity → faint objects and small fluctuations

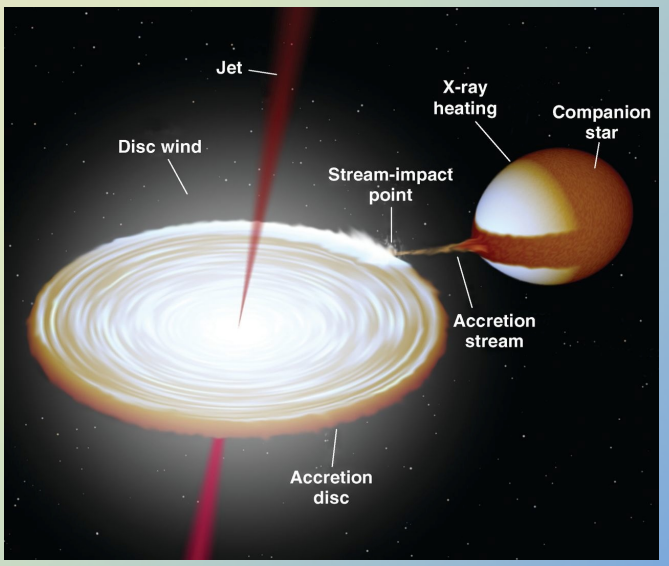

Artist impression of an interacting binary system

Millisecond Pulsar Binaries

Constrain the equation of state of neutron stars by determining their maximum mass.

- Broadband & time resolution → orbital inclination and mass transfer
- Sensitivity → large sample → find most massive neutron stars

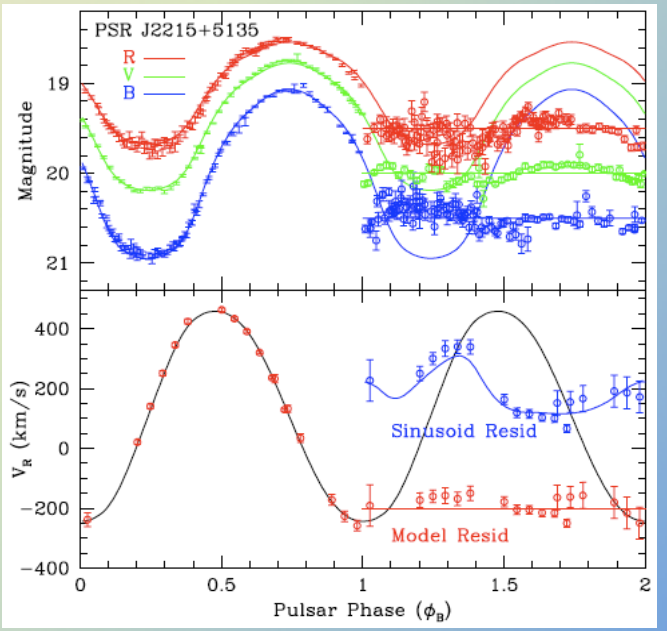

Fast optical photometry and radial velocity of a millisecond pulsar (Romani et al. 2015)

X-Ray Binaries

Obtain new insights into accretion physics near the black hole event horizon and properties of jets.

- Broadband & time resolution:
  - disentangle emission / physical processes → disk, jet, companion
  - Correlate inflow / outflow
  - Compact object masses
  - Properties disk & environment → progenitors

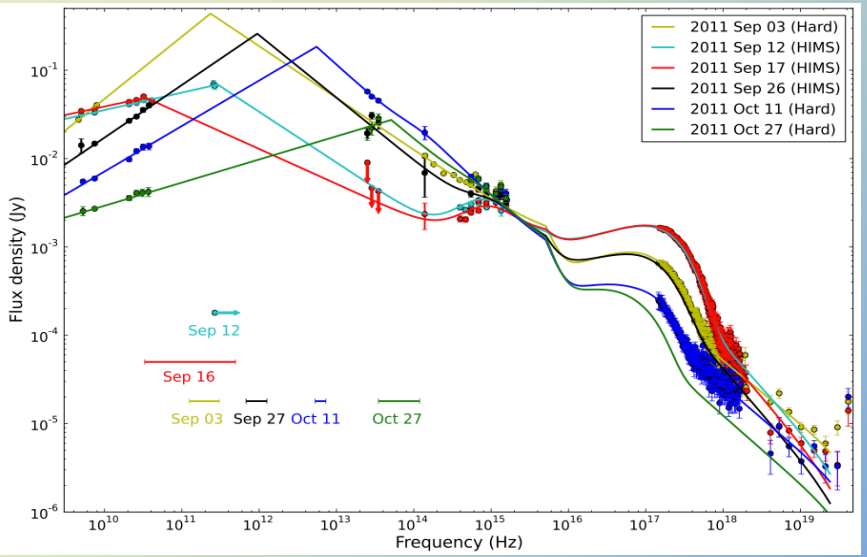

Broadband spectra of an X-ray binary outburst, with optical-to-nIR emission caused by various processes (Russell et al. 2014)

Supernovae

Probe explosion physics and evolution of dust in the Universe; and further constrain cosmological parameters.

- Flash spectroscopy
- Late-time spectroscopy → mass-loss & progenitors
- nIR spectroscopy → dust characteristics
- nIR → push redshift limit of Hubble diagram
- Optical & nIR → Type II possible standard candles

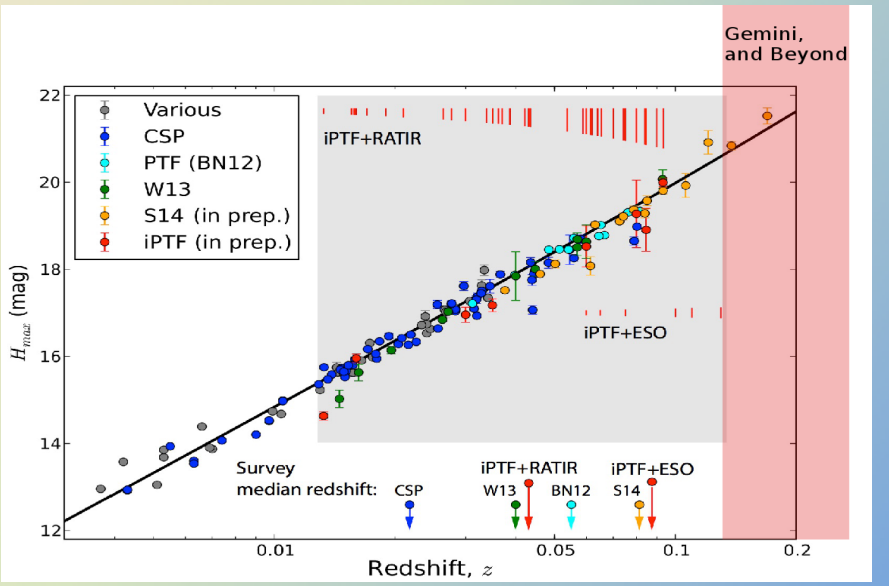

nIR Hubble diagram for Type Ia supernovae (Johansson et al., in prep.)

Supernova Remnants

Probe progenitors and dust evolution in supernova environments.

- Broadband spectroscopy & sensitivity → dynamics & chemistry of ejecta, interstellar medium conditions
- Galaxy samples → population studies & cosmic-ray acceleration

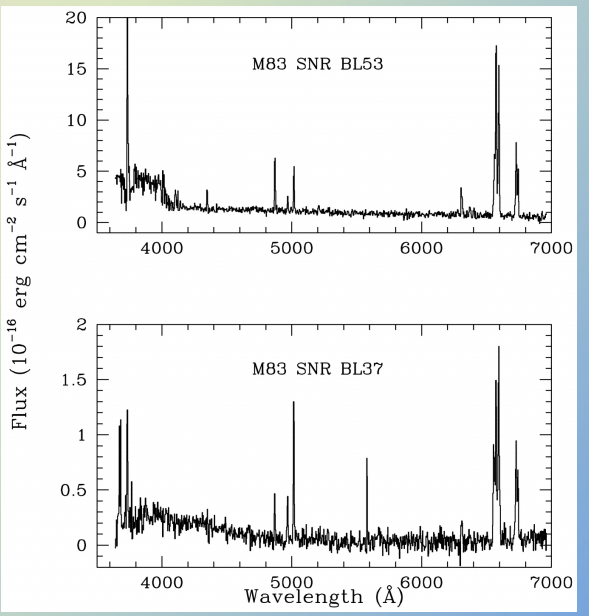

Optical spectra of 2 supernova remnant candidates in M83 (Blair & Long 2004)

Gamma-Ray Bursts

Explore the Universe up to the very beginning of stellar formation, within the epoch of reionization.

- Broadband imaging & spectroscopy → redshifts, cosmic star formation history
- Broadband spectroscopy → host galaxies to high redshifts
- Time resolution & imaging → jet physics
- Broadband imaging → gravitational wave counterparts

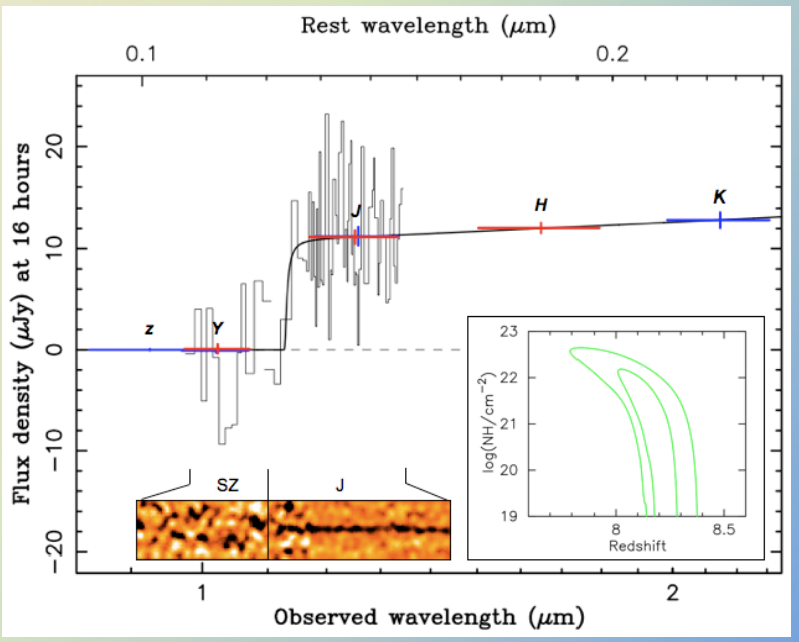

Photometry and spectroscopy of most distant gamma-ray burst (Tanvir et al. 2009)

Active Galactic Nuclei

Acquire fundamental clues on the role of supermassive black holes and their formation in galaxy evolution.

- Broadband → probe different regions of the accretion disk → emission regions sizes, black hole mass, large redshift range
- Spectroscopy & flexible scheduling → monitoring extreme ones → physics of accretion disk & emission line regions

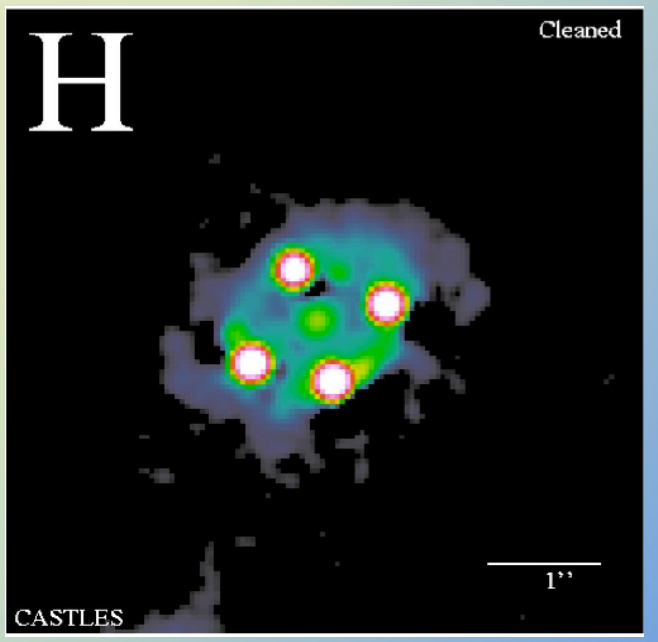

HST image of multi-lensed quasar, requiring IFU (Claeskens et al. 2008)

Tidal Disruption Events

Measure the mass and spin of supermassive black holes.

- Scheduling flexibility → regions close to black hole → relativistic & spin effects
- Spectroscopy → gas close to black hole
- Broadband photometry → identification, black hole mass, host galaxies, search for jets

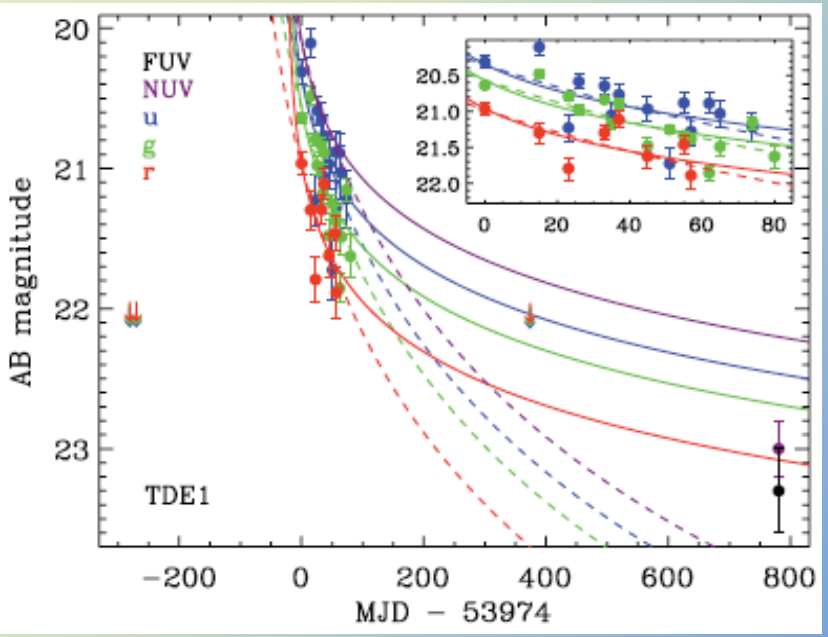

Broadband optical observations of a tidal disruption event (van Velzen et al. 2011)

Galaxy Clusters

Shed light on the content of dark matter and the energy density of the Universe through lensing.

- Broadband photometry → identify multiple images in achromatic lensing → cluster mass profiles
- Large sample → improve cosmological parameters

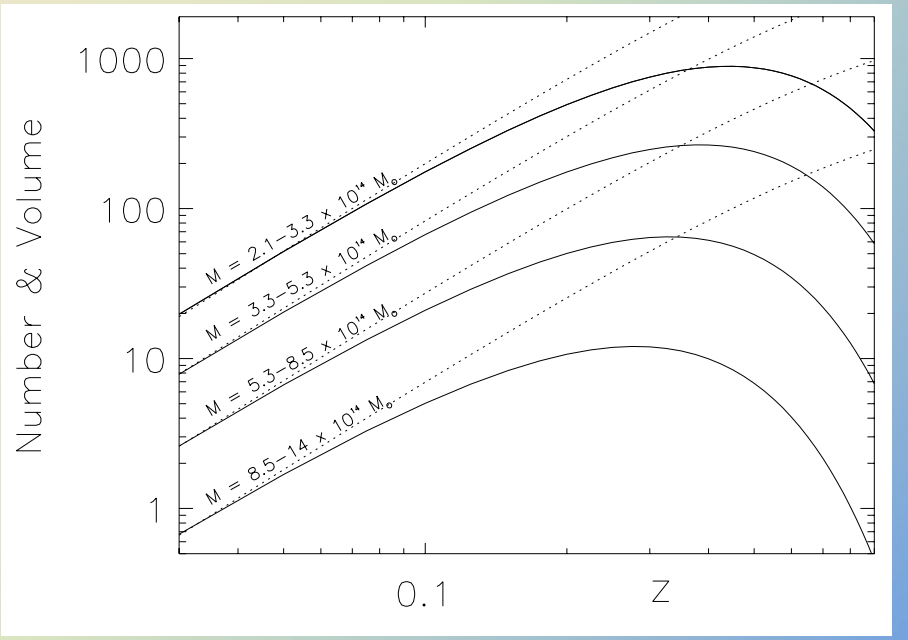

Expected evolution of clusters with redshift, with turn-over at higher redshifts not yet well known

Science Requirements

- Science requirements → technical requirements
- Prioritizing capabilities:
  - Imaging bands
  - Spectral range and resolution
  - Time resolution
  - Fast response
  - Field of view
  - Spectropolarimetry
  - Integral Field Unit
- Observing time and conditions

Priorities

Science Topic	Multi-band Imaging	Time Resolu-tion	Multi-wavel. Spectr.	Spectro-polari-metry	IFU Spectr.
Trans-Neptunian Objects	*5*	*3*	*4*	*1*	*2*
Extrasolar Planets	*3*	*2*	*5*	*1*	*2*
Asteroseismology	*5*	*3*	*4*	*3*	*1*
Massive Stars	*5*	*3*	*5*	*3*	*5*
Brown Dwarfs	*5*	*5*	*4*	*1*	*1*
Low-Mass Binaries	*5*	*5*	*4*	*1*	*1*
Low-Metallicity Stars	*4*	*1*	*5*	*1*	*1*
Isolated Neutron Stars	*5*	*5*	*3*	*4*	*3*
Magnetars	*5*	*5*	*3*	*4*	*1*
Interacting Binaries	*5*	*5*	*4*	*3*	*2*
Millisec. Pulsar Binaries	*5*	*5*	*3*	*2*	*1*
X-Ray Binaries	*5*	*5*	*4*	*1*	*1*
Supernovae	*5*	*1*	*5*	*4*	*4*
Supernova Remnants	*5*	*1*	*5*	*2*	*3*
Gamma-Ray Bursts	*5*	*2*	*5*	*2*	*3*
Active Galactic Nuclei	*5*	*1*	*5*	*3*	*2*
Tidal Disruption Events	*5*	*3*	*5*	*2*	*1*
Galaxy Clusters	*5*	*2*	*4*	*1*	*4*

Imaging Bands

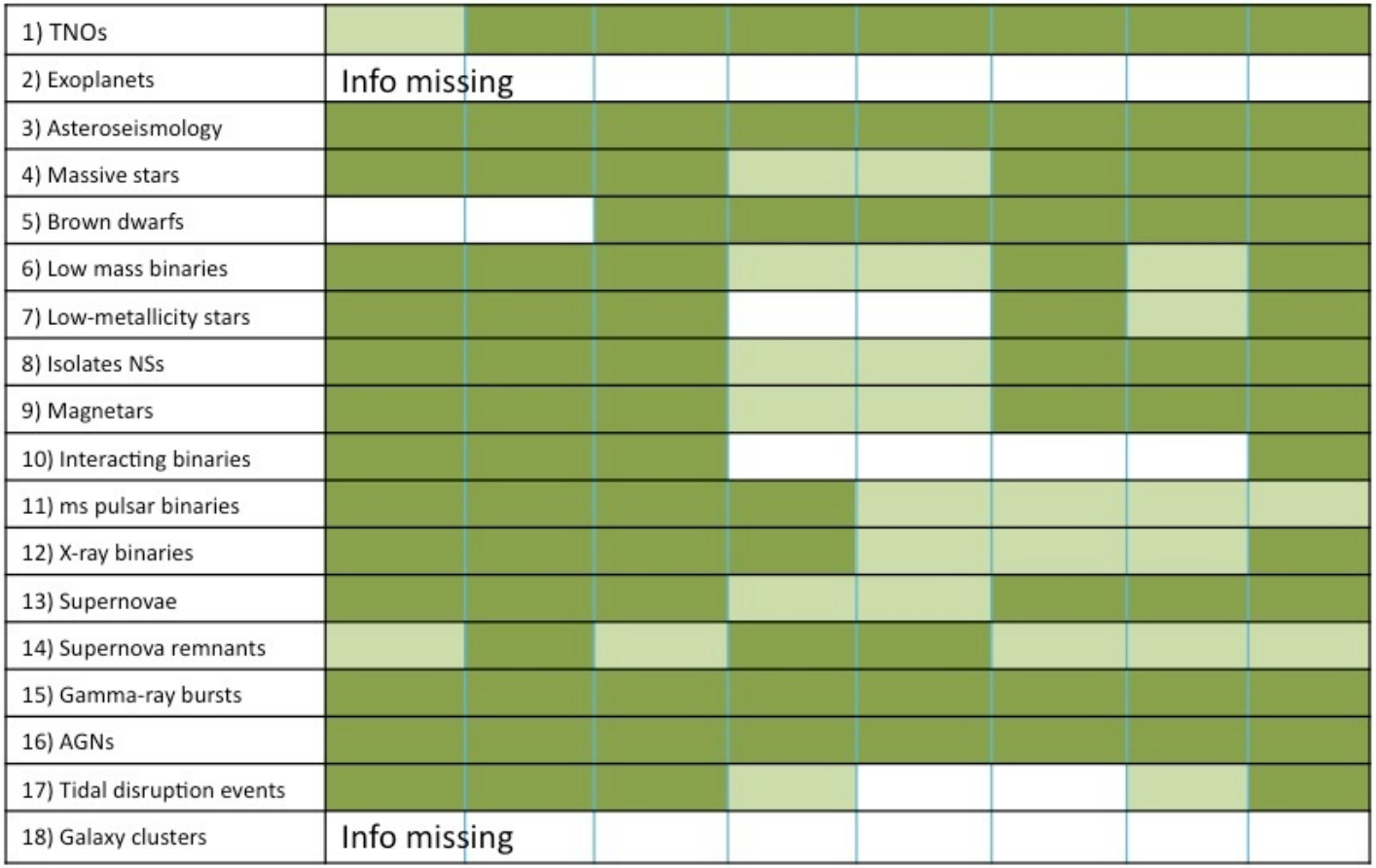

u-Band Imaging & Spectroscopy

- Low u-band throughput in current coating
- Mostly not necessary, but useful for some
- Good spectral resolution and coverage more important
- Current coating of Gemini unique and preferred
- Examples of u-band usage:
  - Same bands as LSST (photometry)
  - Asteroseismology (photometry)
  - Low-metallicity stars (spectroscopy)
  - Interacting binaries (photometry)
  - Supernova dust extinction (photometry & spectroscopy)
  - Tidal disruption events (photometry)

Spectral Coverage

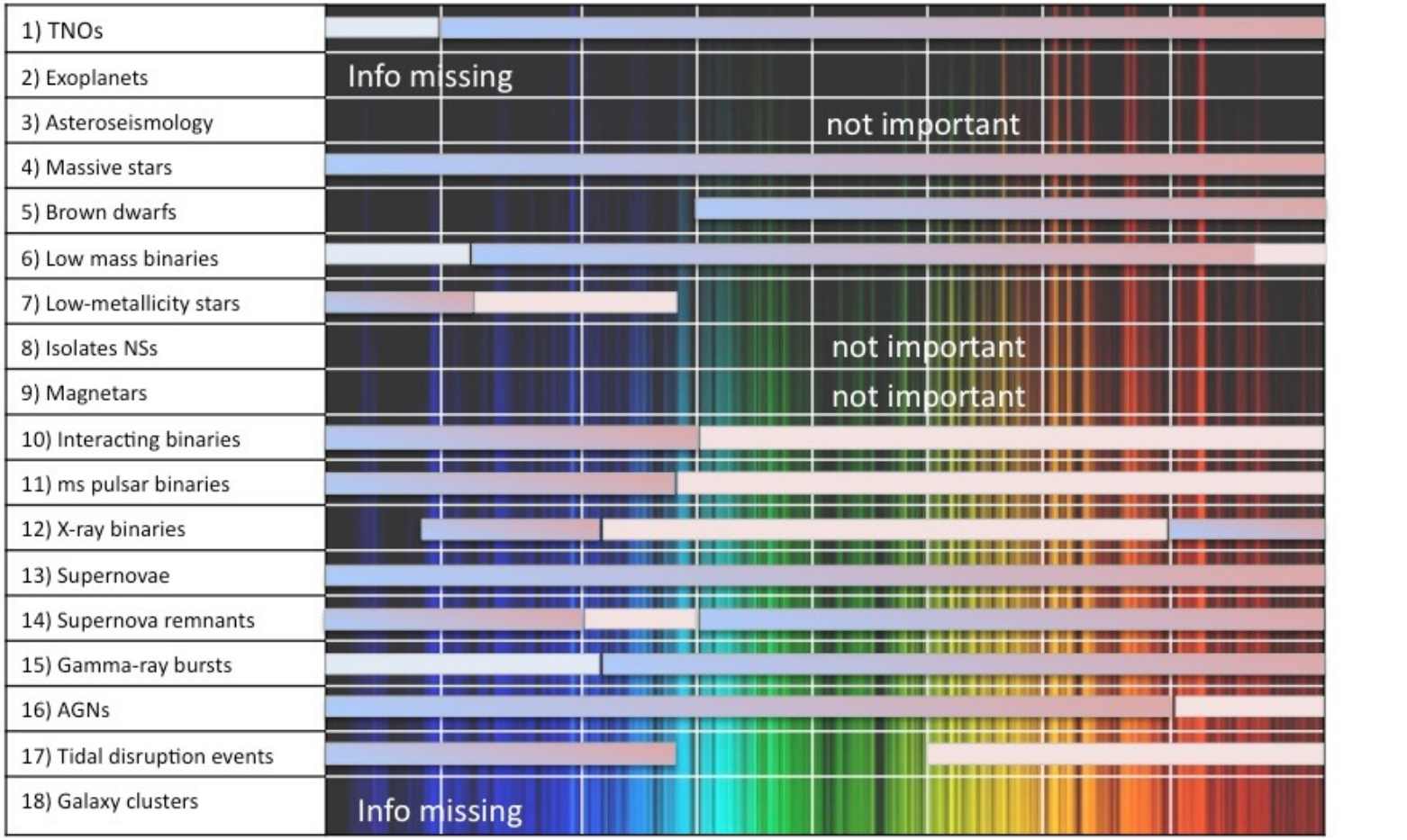

Spectral Resolution

- Resolution 3,000-4,000 optimal for most science cases
- Limited interest in high-resolution spectroscopy
- Worry about efficiency and low number of targets
- Examples of echelle spectroscopy usage:
  - Properties of gas absorptions surrounding supernovae, probing progenitor evolution and mass-loss history
  - Interplay between pulsations and mass-loss events in stars
  - Orbital parameters of interacting binaries and constraints on inter-binary region
  - Better characterization of low-metallicity stars

Time Resolution

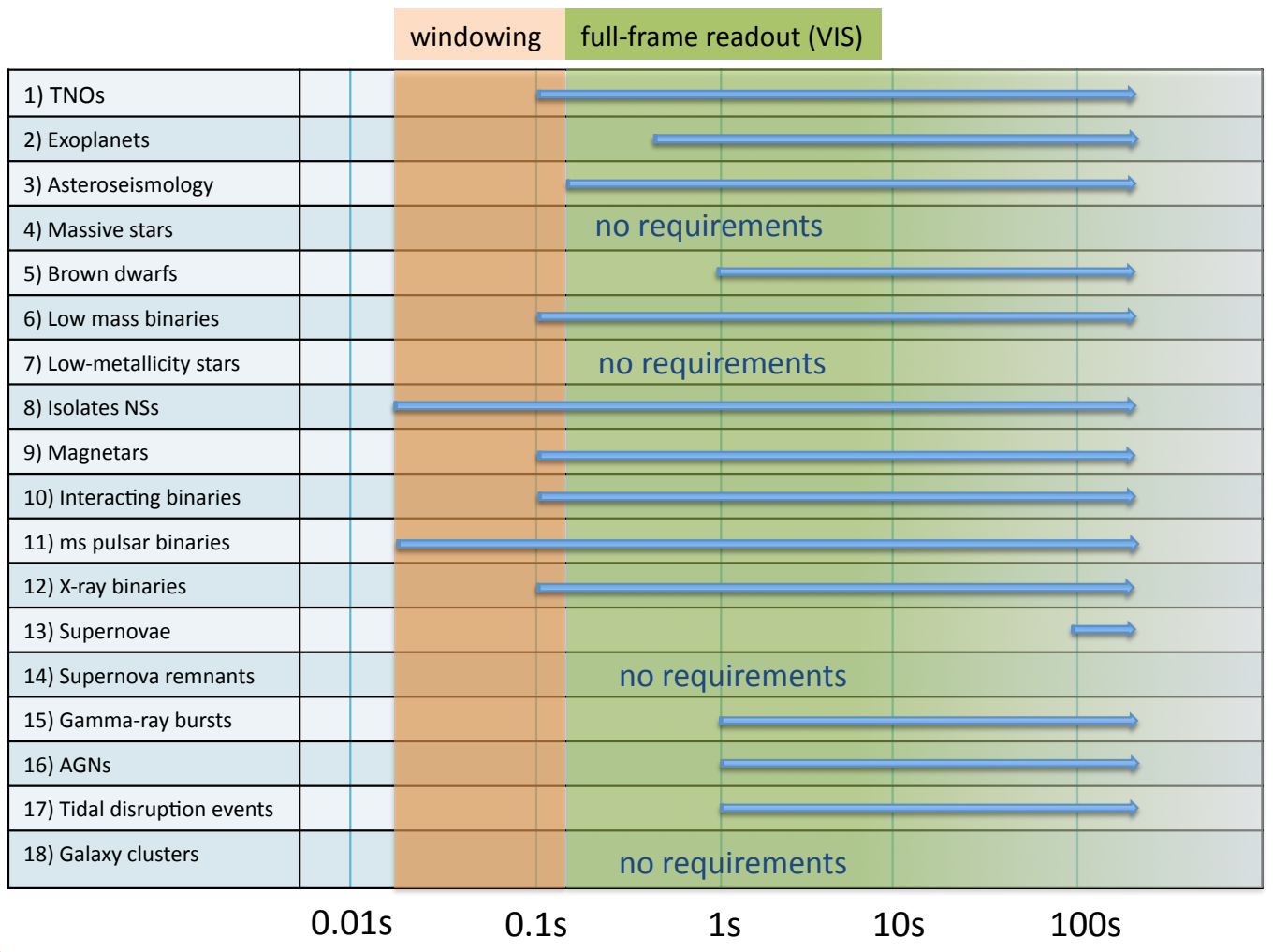

Fast Response Mode

- Typical timescale at which observations should start
- One day:
  - X-ray binaries → outburst onset
  - Tidal disruption events → outburst onset
- Few hours:
  - Supernovae → flash spectroscopy / shock breakout
  - Magnetars → high-energy outburst peak
- Few minutes:
  - Gamma-ray bursts → jet content & magnetic fields

Field of View

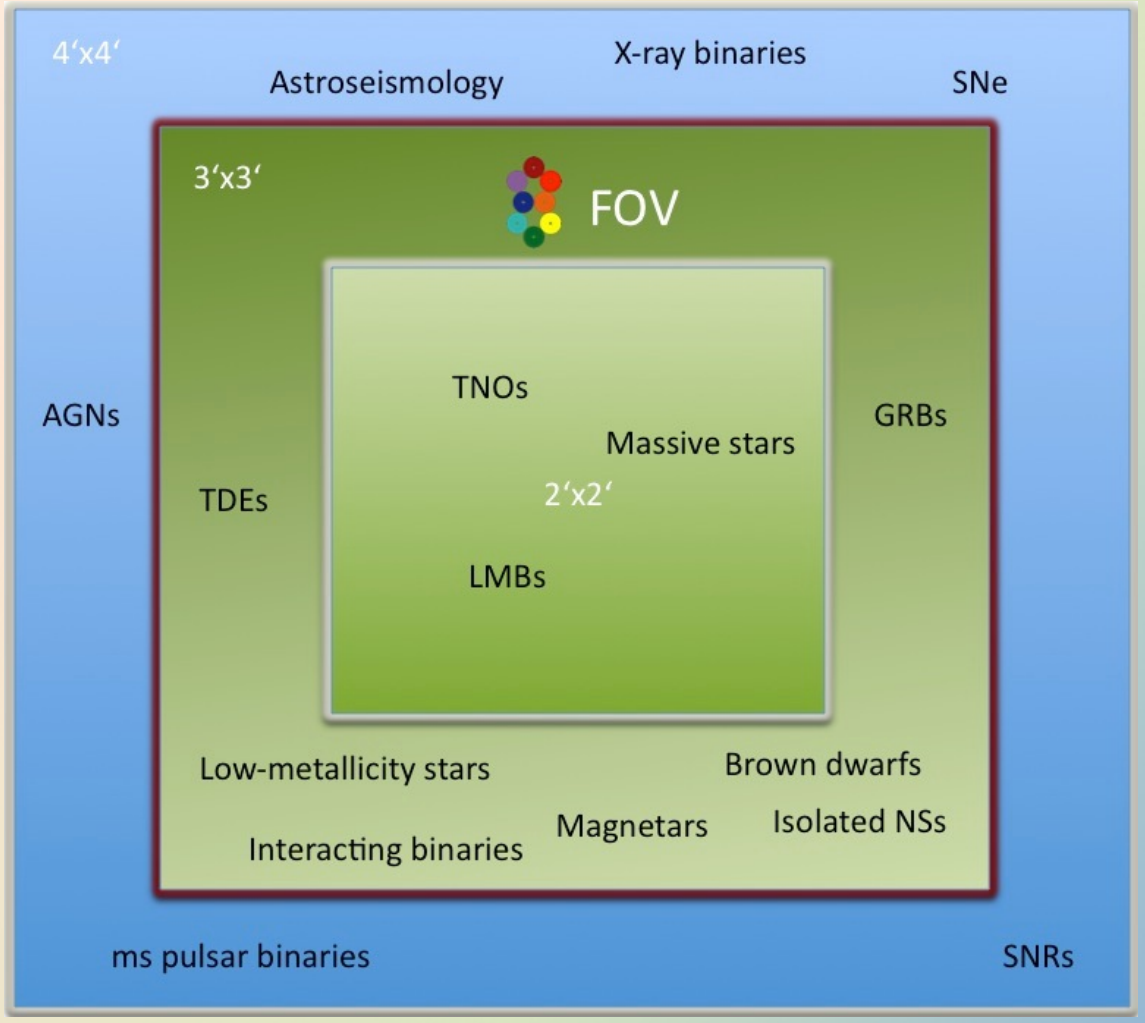

Spectropolarimetry

- Polarization complimentary → asymmetry in the source, or between the source and the observer:
  - Magnetic fields
  - Collimated particle beams
  - Light scattering by dust or surface
- Spectropolarimetry from optical to nIR unique:
  - Magnetic fields in massive stars or brown dwarfs
  - Asphericity in supernova explosions
  - Size and evolution of asteroids and comets
  - Interstellar and circumstellar magnetic fields
  - Characterization of extrasolar planet orbits
  - Lots of discovery science

Integral Field Unit

- Interest but not the highest priority for most science cases
- Examples of IFU usage:
  - Activated asteroids, and low-activity or distant comets
  - Structure and kinematics of circumstellar material, disks and jets in massive stars
  - Construct 3D maps of giant extragalactic HII regions
  - Host galaxies gamma-ray bursts and active galactic nuclei
  - Characterize hosts and stellar populations around supernovae
  - Fast spectroscopy with prior imaging observations

OCTOCAM Science Traceability Matrix

STAC Principles	OCTOCAM Science Goals	OCTOCAM Science Objectives	Specific Science Objective Driven Instrument Requirements	Expected Performance (Margin)	Specific Science Objective Driven Instrument Considerations/Goals	General Instrument Requirements
1) The instrument should be a workhorse instrument, meaning that it has broad scientific appeal and enables a wide range of science cases. 2) The proposals should be science driven and include science cases. Science cases that provide synergies with new capabilities coming online (e.g. LSST, JWST, ALMA, etc.) are highly desirable, especially including capabilities needed to follow up survey discoveries. 3) The instrument should fit within the technical constraints of the Gemini telescopes as they now exist. 4) The expected cost of the instrument shall be capped at a cost that is to be determined as part of the process of defining the RfP. 5) The technical risk of the instrument should be modest, i.e. the success of the instrument should not depend upon some not-yet-proven technology. 6) The instrument should be highly efficient, maintaining the 8-m aperture advantage. 7) Although proposals for all instruments fitting these criteria will be fully considered, it is the majority opinion of the STAC that a wide-bandwidth moderate-resolution spectrograph is likely to prove most compelling.	1) Efficiently follow-up and characterize new and exciting phenomena discovered by the large surveys and giant telescopes of the 2020s, in the time domain window with simultaneous broad-wavelength coverage. 2) Create a workhorse instrument that optimizes the use of Gemini for broadband single-target observations both for imaging and spectroscopy. 3) Create a tool to study the origin and fate of our Universe by observing the first generation of stars and their environments through the first gamma-ray bursts; following the evolution of the Universe throughout cosmological times by observing galaxies at all redshifts; looking for the origin of our solar system in comets, asteroids, or transneptunian objects; and advancing the understanding of extreme phenomena physics such as magnetars, X-ray binaries, and neutron stars.	1) Multi-band occultations of Trans-Neptunian objects as probes of surface composition, potential companions and atmospheric traces.	PTR = 100 ms R_{Vis} = 3000 R_{IR} = 3000	PTR[1] = 33 ms (203%) R_{Vis} ≥ 3240 (≥ 8%) R_{IR} ≥ 3798 (≥ 27%)	Possible spectropolarimetry 10" x 10" IFU useful	Observing modes: Multichannel imaging and spectroscopy. Photometric Bandwidth: 370-2350nm (grziYJHK) Spectroscopic Bandwidth: 370-2350 nm Field-of-view: 3' x 3' Visible Resolution: R ≥ 3000 IR Resolution: R ≥ 3700 Entrance slits: 0.6", 0.8", 1.0", 1.2", 5" Image slicer: 3"x5" (5 slices of 0.6") Imaging Throughput: > 40% Spectroscopic Throughput: > 30% Imaging Detectors: > 1k x 1k Spectroscopic Detectors: > 2k x 1k Instrument Weight: < 2000 kg Spectropolarimetry: Full-Stokes
		2) Simultaneous multi-band imaging and spectroscopy to identify and characterize extra-solar planets and their atmospheres through transits.	PTR = 500 ms R_{Vis} = 3000 R_{IR} = 3700	PTR[1] = 33 ms (1415%) R_{Vis} ≥ 3240 (≥ 8%) R_{IR} ≥ 3798 (≥ 3%)	R_{IR} ≥ 4000	
		3) Asteroseismology to determine the internal structure of stars.	PTR = 100 ms R_{Vis} = 3000 R_{IR} = 3700 u-band limit ≥ 370 nm	PTR[1] = 33 ms (203%) R_{Vis} ≥ 3240 (≥ 8%) R_{IR} ≥ 3798 (≥ 3%) Complies	Photometric S/N = 100 High Dynamic Range R_{IR} ≥ 4000	
		4) Optical-to-near-infrared photometry and spectroscopy of massive stars to characterize their stellar winds in different phases of their evolution.	R_{Vis} = 3000 R_{IR} = 3700 u-band limit ≥ 370 nm	R_{Vis} ≥ 3240 (≥ 8%) R_{IR} ≥ 3798 (≥ 3%) Complies	Echelle grisms useful Possible spectropolarimetry 10" x 10" IFU useful R_{IR} ≥ 4000	
		5) Multi-band imaging of brown dwarfs to determine the composition of their atmospheres and the role of clouds on the opacity.	PTR = 1 s R_{Vis} = 3000 R_{IR} = 3000	PTR[1] = 33 ms (2930%) R_{Vis} ≥ 3240 (≥ 8%) R_{IR} ≥ 3798 (≥ 27%)		
		6) High resolution radial velocity curves of low-mass binaries to very stellar evolution by accurately measuring mass-radius relations.	PTR = 100 ms R_{Vis} = 3000 R_{IR} = 3000	PTR[1] = 33 ms (203%) R_{Vis} ≥ 3240 (≥ 8%) R_{IR} ≥ 3798 (≥ 27%)		
		7) Determine the nature of carbon-enhanced low-metallicity stars and their connection with the first stars.	R_{Vis} = 3000 R_{IR} = 3700	R_{Vis} ≥ 3240 (≥ 8%) R_{IR} ≥ 3798 (≥ 3%)	Echelle grisms useful u-band important R_{IR} ≥ 4000	
		8) Perform phase-resolved photometry of isolated neutron stars to study the connection between the optical and X-ray/gamma-ray emission, shed light on the physical origin of the optical-to-near-infrared emission, and constrain properties of their atmospheres and magnetospheres.	PTR = 15 ms R_{Vis} = 3000 R_{IR} = 3000 u-band limit ≥ 370 nm	PTR[2] = 12 ms (25%) R_{Vis} ≥ 3240 (≥ 8%) R_{IR} ≥ 3798 (≥ 27%) Complies	PTR = 10 ms Spectropolarimetry interesting 10" x 10" IFU useful	
		9) Well-sampled spectral energy distributions in the optical-to-near-infrared regime to constrain the emission origin and mechanisms of magnetars.	PTR = 100 ms R_{Vis} = 3000 R_{IR} = 3000	PTR[1] = 33 ms (203%) R_{Vis} ≥ 3240 (≥ 8%) R_{IR} ≥ 3798 (≥ 27%)	PTR = 10 ms Spectropolarimetry interesting	
		10) Study the physics of accretion streams and disks in interacting binary systems.	PTR = 100 ms R_{Vis} = 3000 R_{IR} = 3000	PTR[1] = 33 ms (203%) R_{Vis} ≥ 3240 (≥ 8%) R_{IR} ≥ 3798 (≥ 27%)	Echelle grisms useful Possible spectropolarimetry 10" x 10" IFU possibly useful u-band important	
		11) Multi-band imaging of binary millisecond pulsars to constrain the equation of state of neutron stars.	PTR = 15 ms R_{Vis} = 3000 R_{IR} = 3000	PTR[2] = 12 ms (25%) R_{Vis} ≥ 3240 (≥ 8%) R_{IR} ≥ 3798 (≥ 27%)	PTR = 10 ms	
		12) Complement X-ray/gamma-ray observations to extend our understanding of accretion and jet physics in X-ray binaries.	PTR = 100 ms R_{Vis} = 3000 R_{IR} = 3700	PTR[1] = 33 ms (203%) R_{Vis} ≥ 3240 (≥ 8%) R_{IR} ≥ 3798 (≥ 3%)	Spectropolarimetry interesting R_{IR} ≥ 4000	
		13) Optical-to-near-infrared measurements of supernovae to probe interactions with a dense circumstellar medium, shock-break outs, dust and geometric and dynamical configurations; and to push the current redshift limits and constraints on the cosmological parameters.	PTR = 100 s R_{Vis} = 3000 R_{IR} = 3700	PTR[3] = 5.25 s (90%) R_{Vis} ≥ 3240 (≥ 8%) R_{IR} ≥ 3798 (≥ 3%)	Echelle grisms useful Spectropolarimetry useful 10" x 10" IFU useful u-band limit as low as possible R_{IR} ≥ 4000	
		14) Probe supernova progenitors and their surroundings with supernova remnant photometry and spectroscopy.	R_{Vis} = 3000 R_{IR} = 3700 u-band limit ≥ 370 nm	R_{Vis} ≥ 3240 (≥ 8%) R_{IR} ≥ 3798 (≥ 3%) Complies	10" x 10" IFU possibly useful R_{IR} ≥ 4000	
		15) Multi-band imaging and spectroscopy to observe gamma-ray bursts to probe the beginnings of stellar formation and the epoch of reionization.	PTR = 1 s R_{Vis} = 3000 R_{IR} = 3700	PTR[1] = 33 ms (2930%) R_{Vis} ≥ 3240 (≥ 8%) R_{IR} ≥ 3798 (≥ 3%)	Spectropolarimetry useful 10" x 10" IFU useful R_{IR} ≥ 4000	
		16) Wide spectral range observations of active galactic nuclei to determine their fundamental physical properties, also providing fundamental clues in understanding galaxy evolution, in particular the role of supermassive black holes and their formation.	PTR = 1 s R_{Vis} = 3000 R_{IR} = 3700	PTR[1] = 33 ms (2930%) R_{Vis} ≥ 3240 (≥ 8%) R_{IR} ≥ 3798 (≥ 3%)	Largest field-of-view possible Possible spectropolarimetry 10" x 10" IFU possibly useful R_{IR} ≥ 4000	
		17) Complement X-ray/gamma-ray observations of tidal disruption events to measure the mass and spin of supermassive black holes.	PTR = 1 s R_{Vis} = 3000 R_{IR} = 3700	PTR[1] = 33 ms (2930%) R_{Vis} ≥ 3240 (≥ 8%) R_{IR} ≥ 3798 (≥ 3%)	u-band important R_{IR} ≥ 4000	
		18) Imaging lensing clusters of galaxies to determine the content of the dark matter and the energy density in the Universe.	R_{Vis} = 3000 R_{IR} = 3700	R_{Vis} ≥ 3240 (≥ 8%) R_{IR} ≥ 3798 (≥ 3%)	R_{IR} ≥ 4000	

Notes: PTR = photometric time resolution; R = spectral resolution; [1]Assuming a readout of a 30x30 pixel window at 50 kHz and 2 e^- read noise; [2]Assuming a readout of a 30x30 pixel window at 3 MHz and 8 e^- read noise; [3]Assuming a full-frame readout at 50 kHz and 2 e^- read noise.

Observing Time & Conditions

Science Topic	Observing Time	Conditions	Seeing
Trans-Neptunian Objects	*100h photom., 100h spectr. (100 obj.)*	*Grey/bright, photom./thin cl.*	*1”*
Extrasolar Planets	*3000h. (100-300 obj.)*	*Bright-dark, photom.*	*2”*
Asteroseismology	*10-15h per year per object*	*Bright-dark, photom.*	*2”*
Massive Stars	*60-80h per year*	*Dark-grey, photom.-clear*	*1”*
Brown Dwarfs	*40-50 nights (40-50 obj.)*	*Bright, clear*	*1-2”*
Low-Mass Binaries	*1 week per system (as many as possible)*	*Dark-grey, photom.*	*2”*
Low-Metallicity Stars	*20-30 nights spectr.*	*Bright-grey, clear-thin clouds*	*1-2”*
Isolated Neutron Stars	*30-60h per year (2-3 obj.)*	*Dark*	*1”*
Magnetars	*10h per outburst (1-2 per year)*	*Dark*	*1”*
Interacting Binaries	*1000h photom.+spectr.*	*Grey, clear-thin clouds*	*1”*
Millisec. Pulsar Binaries	*20 nights photom.+spectr.*	*Bright-dark, non-photom.*	*1-2”*
X-Ray Binaries	*20h per outburst (few per year), 30h per source*	*Dark-grey, photom.*	*1”*
Supernovae	*1h per night (4 obj.)*	*Bright, photom./non-photom.*	*1-2”*
Supernova Remnants	*120h per year photom.+spectr.*	*Dark-grey, non-photom.*	*1”*
Gamma-Ray Bursts	*100h per year photom.+spectr.*	*Bright, thin clouds*	*1-2”*
Active Galactic Nuclei	*tens-100h per year*	*Grey, non-photom.*	*1-2”*
Tidal Disruption Events	*400h per year photom.+spectr. (100 obj.)*	*Grey, photom.*	*1”*
Galaxy Clusters	*1000h (tens-hundreds obj.)*	*Grey-dark, photom.*	*1”*

Design choices and tradeoffs

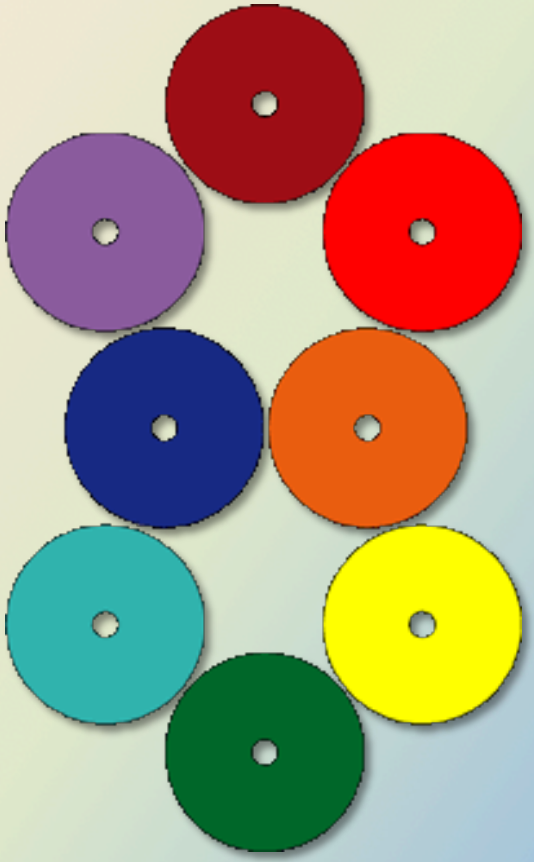

Christina Thöne (PM Spain)

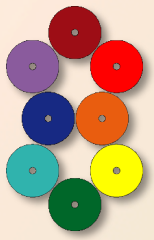

The OCTOCAM consortium

Basic design principles

- **High efficiency**
- **Wide wavelength** coverage (all VIS & nIR range)
- **Simultaneous imaging** in standard bands (Sloan griz + YJHK)
- **Spectroscopy** of the **full range**
- **High time-resolution** imaging capabilities (ms)
- Additional options
  - Spectropolarimetry over the full range
  - Mini-IFU over full range

Science requirements

Science Requirement
Observing Modes: Multichannel imaging and Spectoscopy
Photometric Bandwidth: 400-2350nm (grziYJHK)
Spectroscopic Bandwidth: 370-2350 nm
Field-of-view: 3’ x 3’
Resolution: R > 1500 for g-band, R > 3000
Entrance slits: 0.6”, 0.8”, 1.0”, 1.2”, 5”
Image slicer: > 3“x5“
Imaging Throughput: > 40%
Spectstroscopic Throughput: > 30%
Imaging Detectors: > 1k x 1k, fast frame transfer readout
Spectroscopic Detectors: > 2k x 1k, fast frame transfer readout
Instrument Weight: < 2000 kg
Spectropolarimetry: Full-Stokes
Photometric Time Resolution better than 100 ms

Why 8 channels?

Simultaneous coverage in imaging or spectroscopy

Scientific advantages:

- Use telescope efficiently over the complete range <u>at the same time</u>

Why 8 channels?

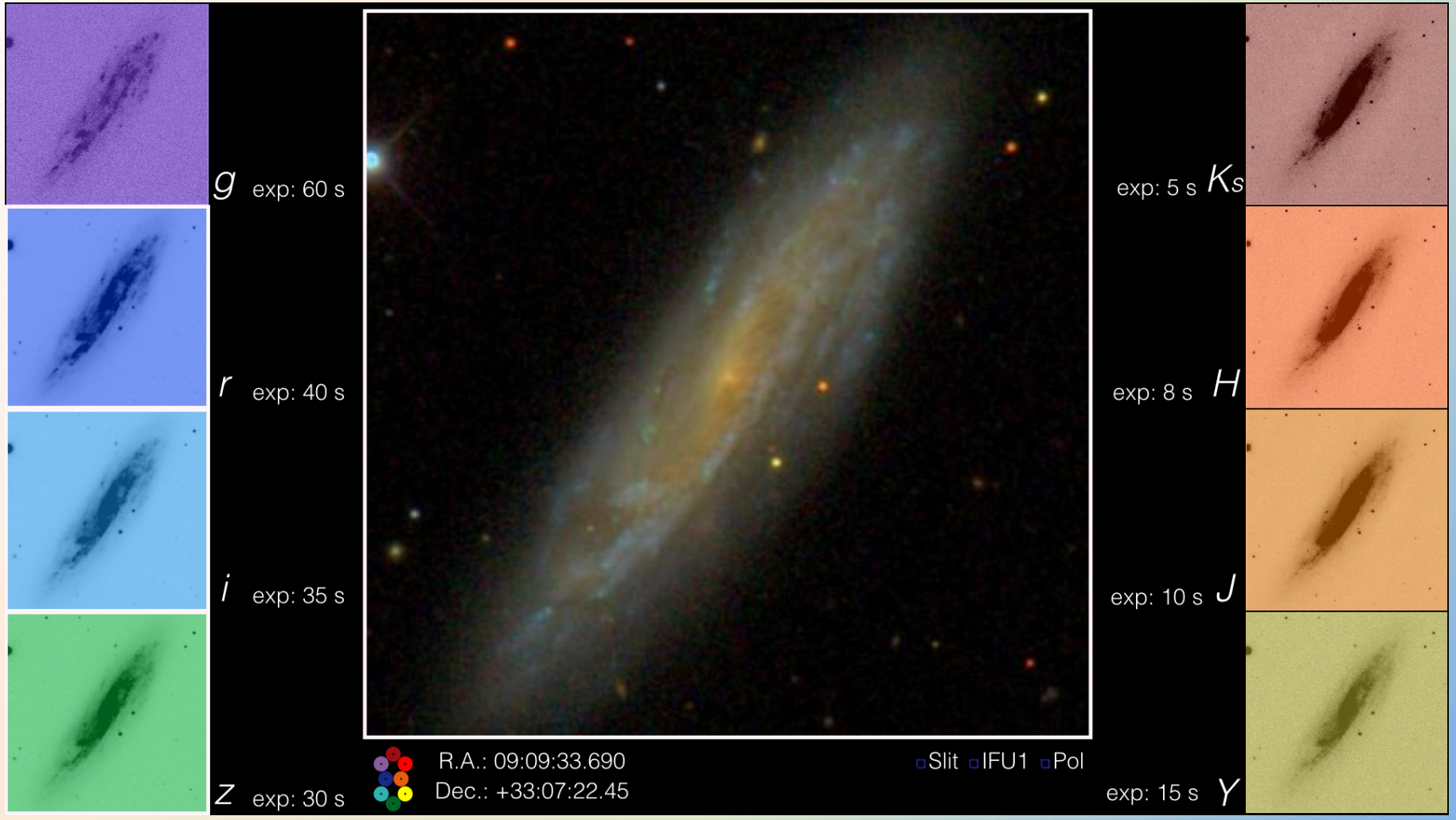

Why 8 channels?

- **Simultaneous** coverage in imaging or spectroscopy

  Scientific advantages:
  - Use telescope efficiently over the complete range <u>at the same time</u>
  - Consistent data throughout all the range and at any time during monitoring of an object (e.g. transients)

Why 8 channels?

lightcurve

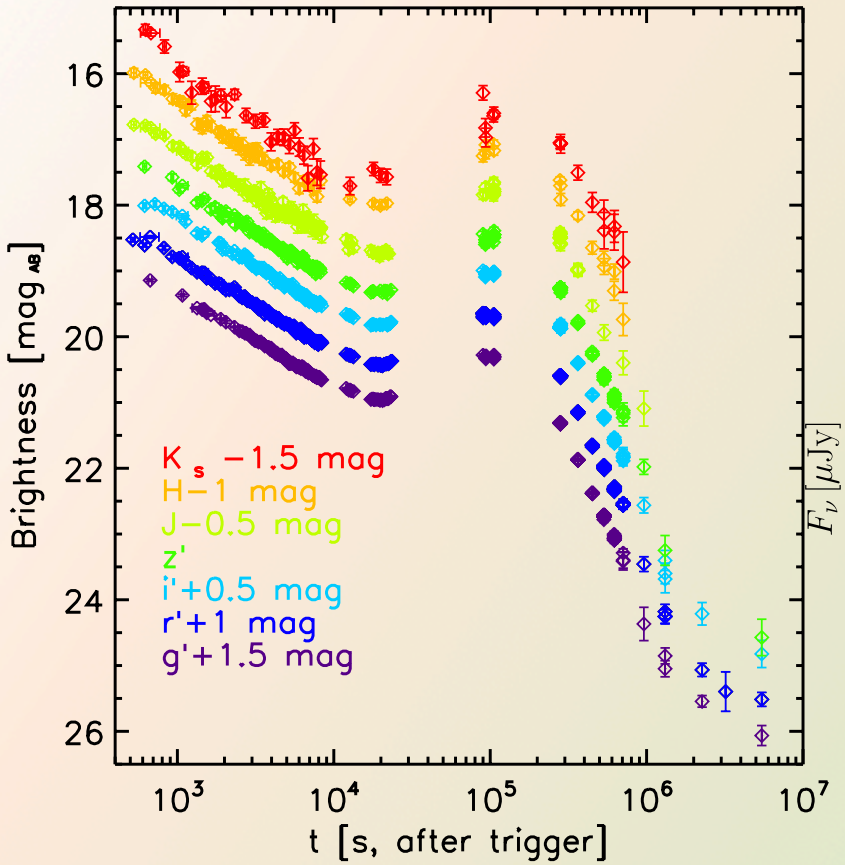

GRB 100814A with GROND (7 channels)

SED

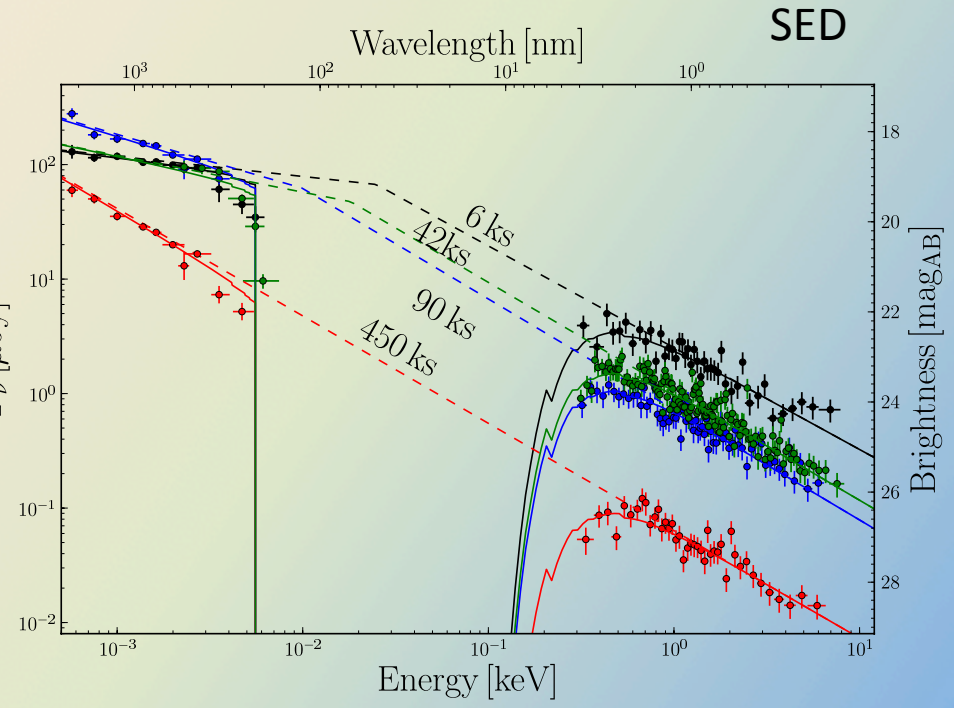

Nardini et al. 2014

Why 8 channels?

Simultaneous coverage in imaging or spectroscopy

Scientific advantages:

- Use telescope efficiently over the complete range <u>at the same time</u>
- Consistent data throughout all the range and at any time during monitoring of an object (e.g. transients)
- High redshift transients easily determined via drop-out method

Why 8 channels?

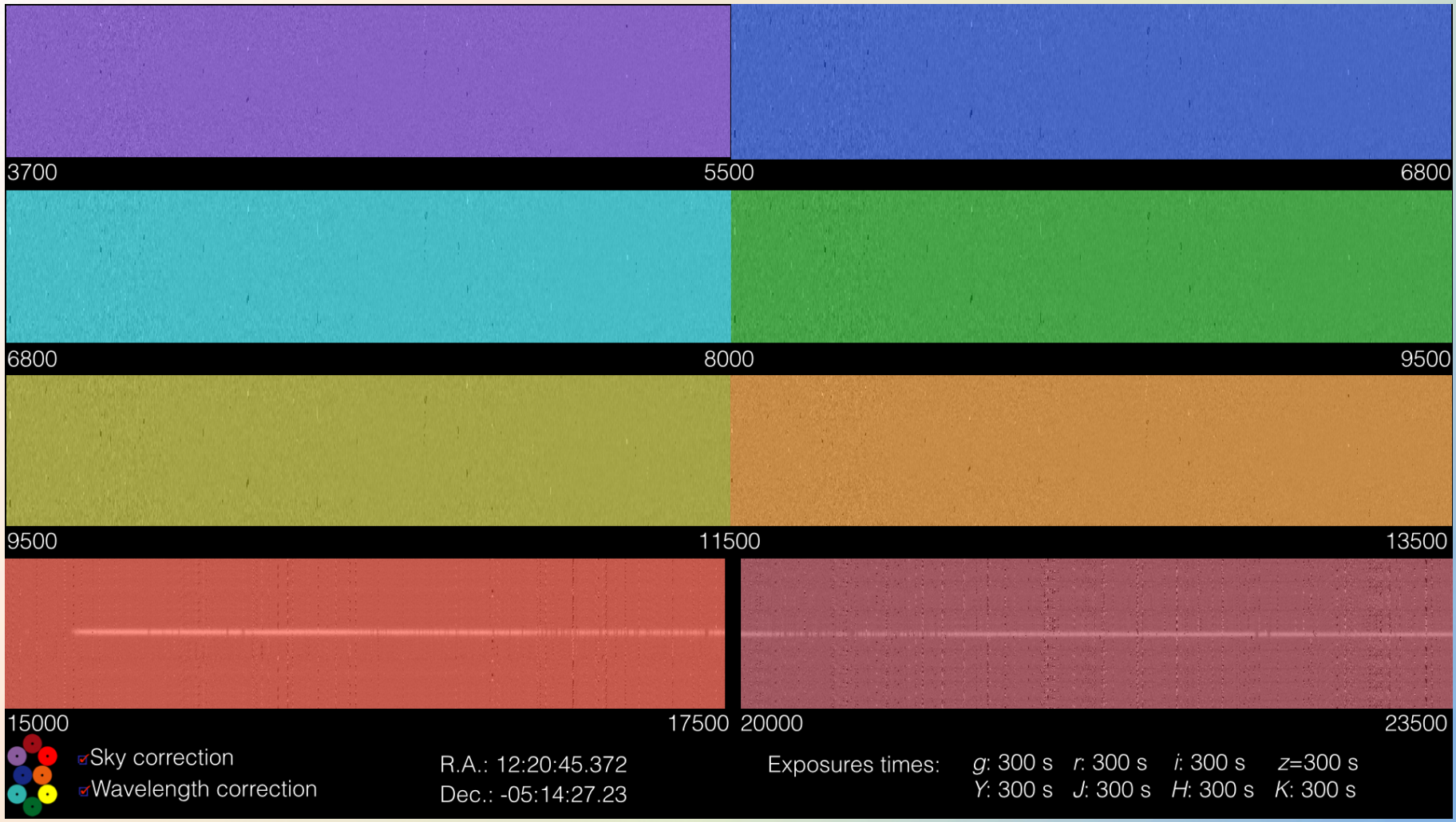

Why 8 channels?

Science wants broad coverage for many science cases!

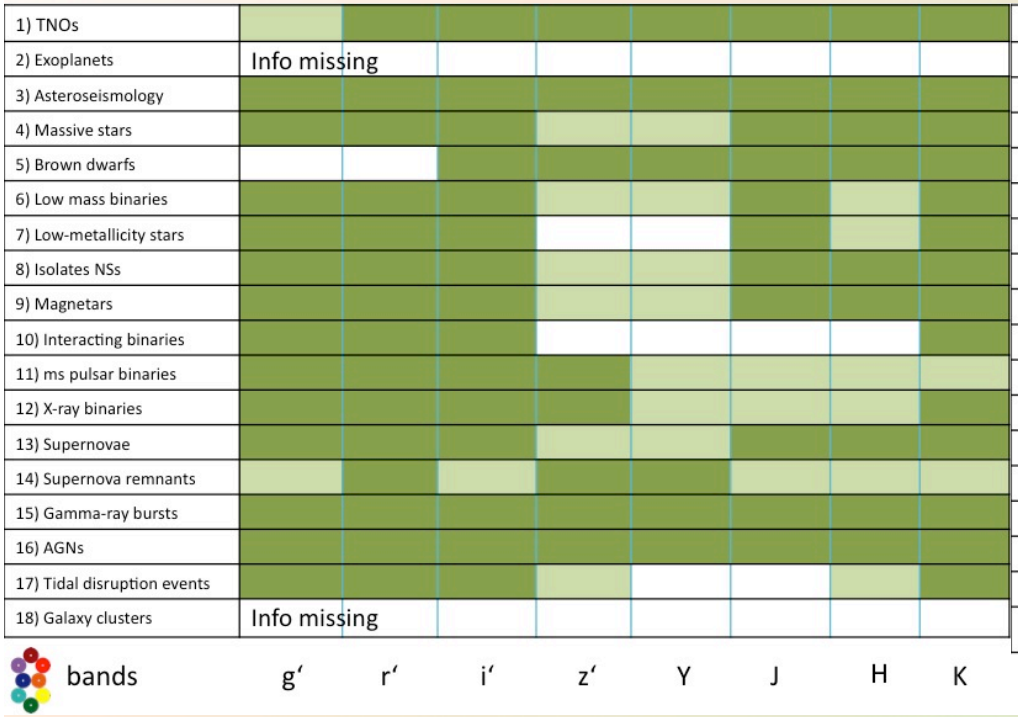

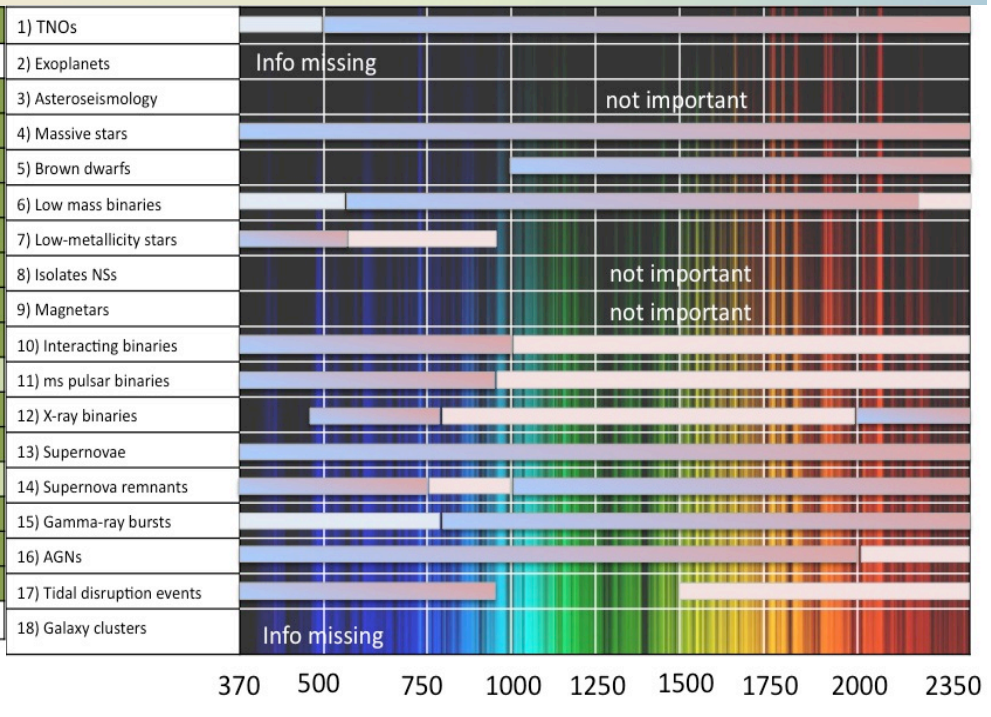

imaging

spectroscopy

Why 8 channels?

Technological/operational advantages:

- Optimise each wavelength range (dichroics, lenses, detectors) ➔**higher efficiency**
- 8 almost identical layouts ➔**save costs**
- Natural way of splitting the beam with least amount of dichroics
- No acquisition camera needed (comes for free, advantage compared to X-shooter)
- Quick, easy and stable calibrations
- Separating K-band gives less noise in J+H-band (problem of X-shooter)

U-band: To include or not to include?

- **Main „issue“** is Gemini‘s silver coating
- Technical issues: ADC, materials, efficiency
- **Science**: Some science cases want down to 3700 Å (f.ex. [OII] 3727Å)

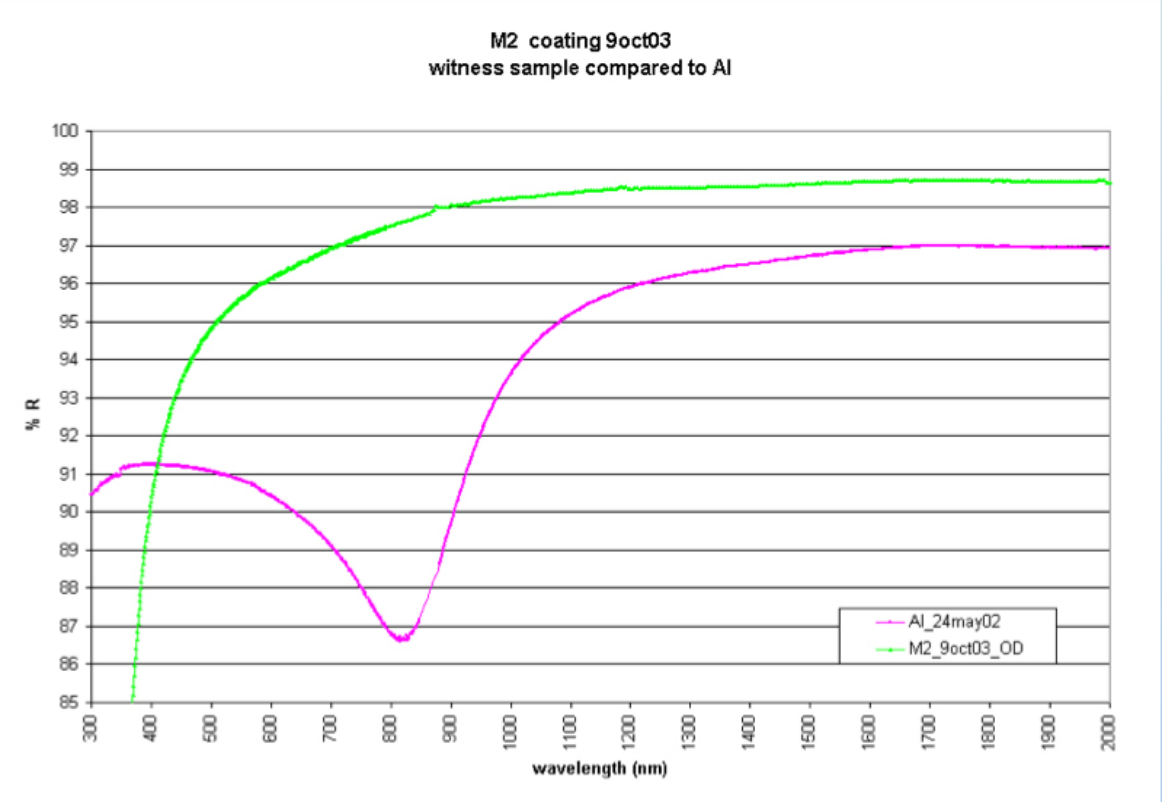

U-band: To include or not to include?

Compromise:

- no *U*-band imaging
- spectroscopy down to coating cutoff (25% efficiency)

- compensate with larger detector (4k x 4k) in g‘ to keep R ~ 4000

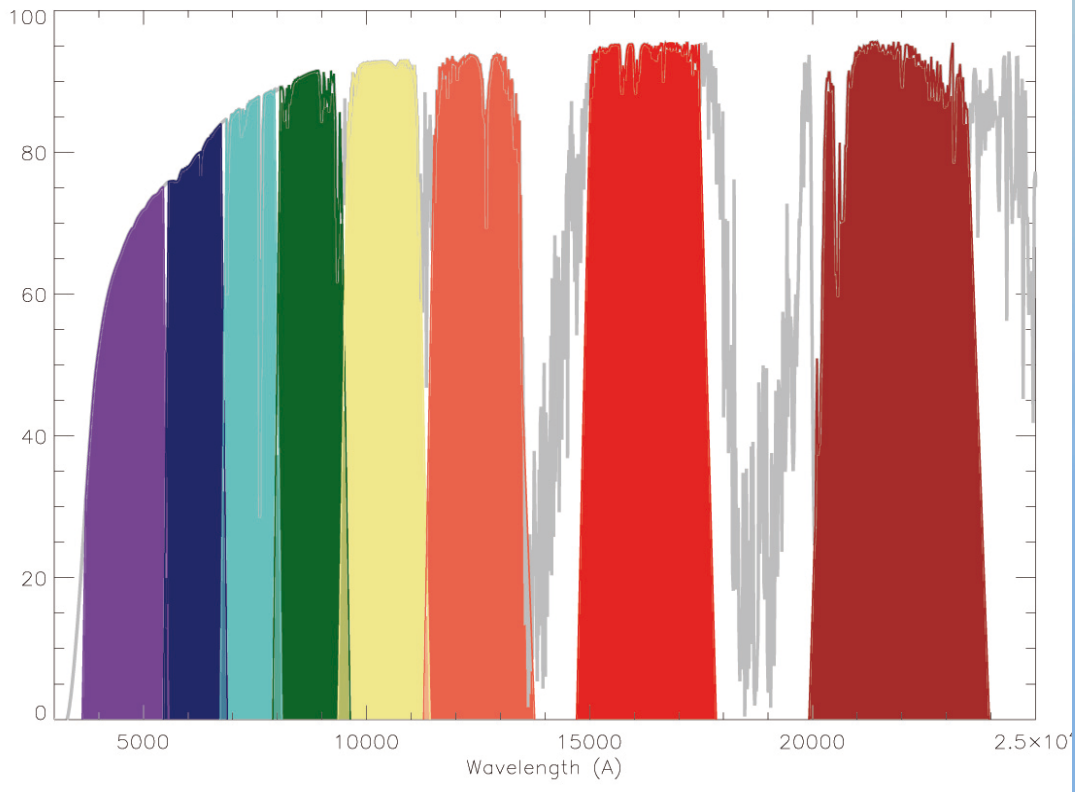

Optical layout and focal planes

Single focal plane

- ✓ Single set of optical elements (slits, IFU, polarimeter)
- ✓ focal plane in IR: elements are cold
- – Low efficiency loss by additional windows (< 3%)

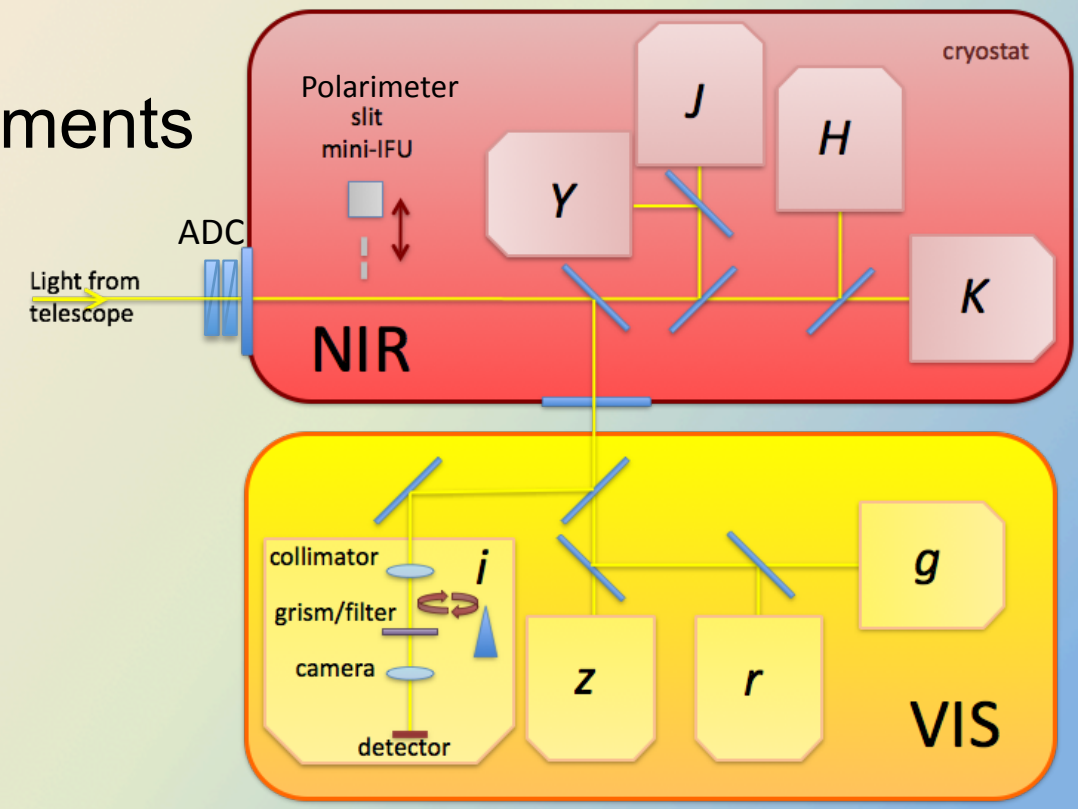

Optical layout and focal planes

Two focal planes

- ✓ Slightly higher efficiency (no additional windows)
- ✓ Only one, more efficient ADC in the VIS (not needed in IR)
- ↯ Does not allow spectropolarimetry
- ↯ Requires slit alignment with active optics
- ↯ More moving elements
- ↯ IFU has to be made twice (or limit to VIS/nIR only)

Spectral resolution

- Science: R=3000-4000 sufficient high sensitivity more important

Band	Central wavelength	Spectral resolution
g	460	3489
r	615	3229
i	745	3820
z	875	3885
Y	1035	4156
J	1250	4267
H	1630	4280
K	2175	4242

- 1k x 2k detectors to reach resolution
- Include *Y*-band + 4x4k detector for *g'*-band to reach uniform resolution across all wavelengths
- R~4000 maximum we get considering
  - detector size + sampling
  - infall angle on grism depends on prism thickness, max. reached (nIR)
  - max. # of lines in grating reached -> would need to increase pupil

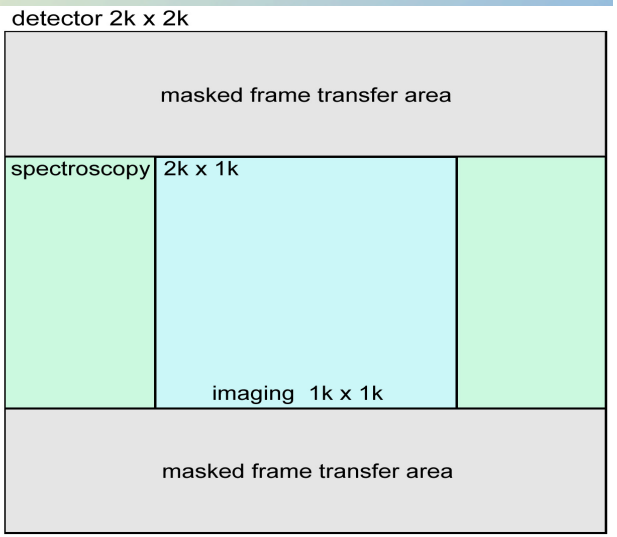

Time resolution

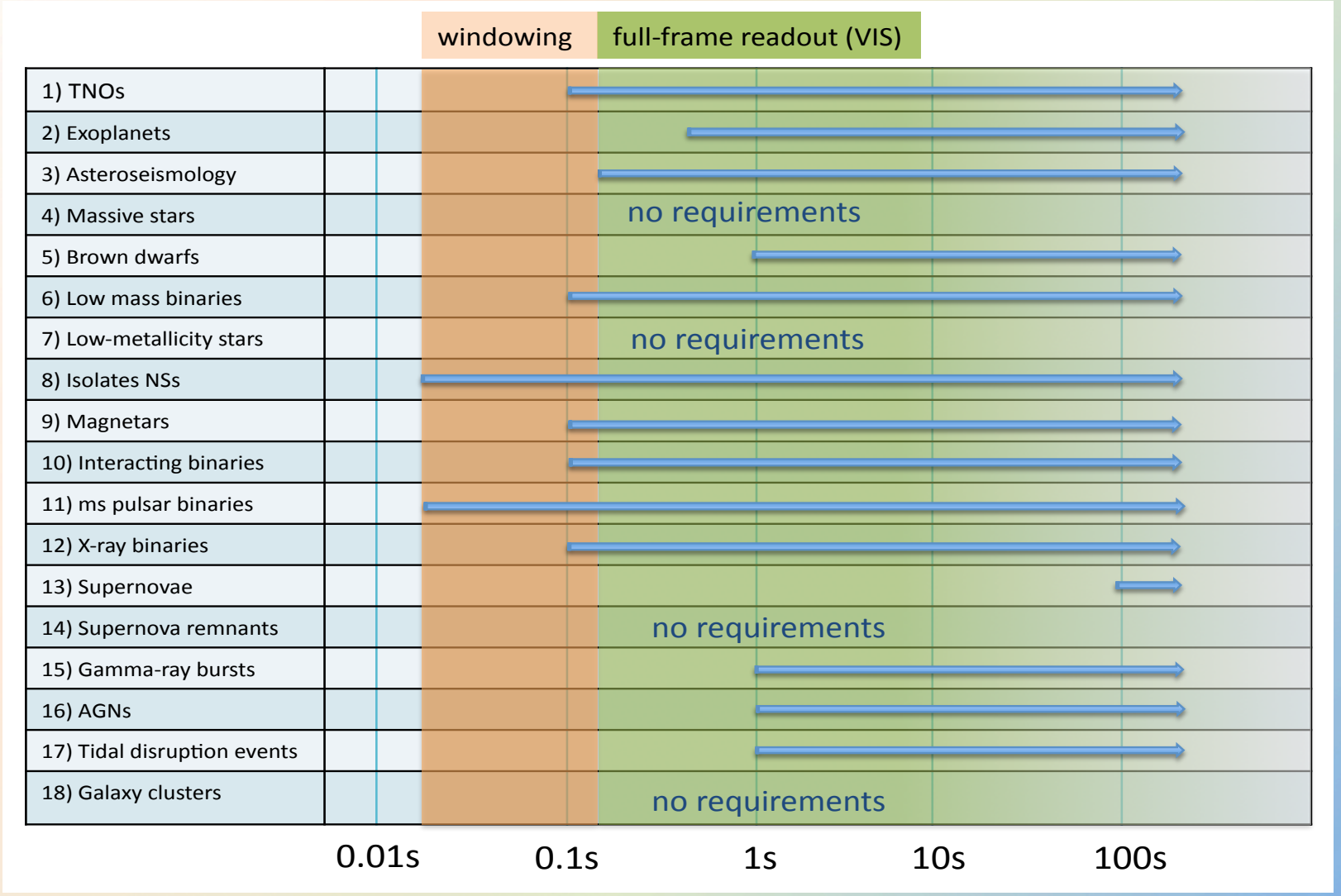

Time resolution

- High-time resolution growing field (see e.g. hipercam)
- Requirement: no effect on other observing modes
- Detector choice:
  VIS: Frame transfer detectors
  nIR: H2RG detectors
- Very high frame rates:
  higher readout noise
- Requires very accurate
  time stamping

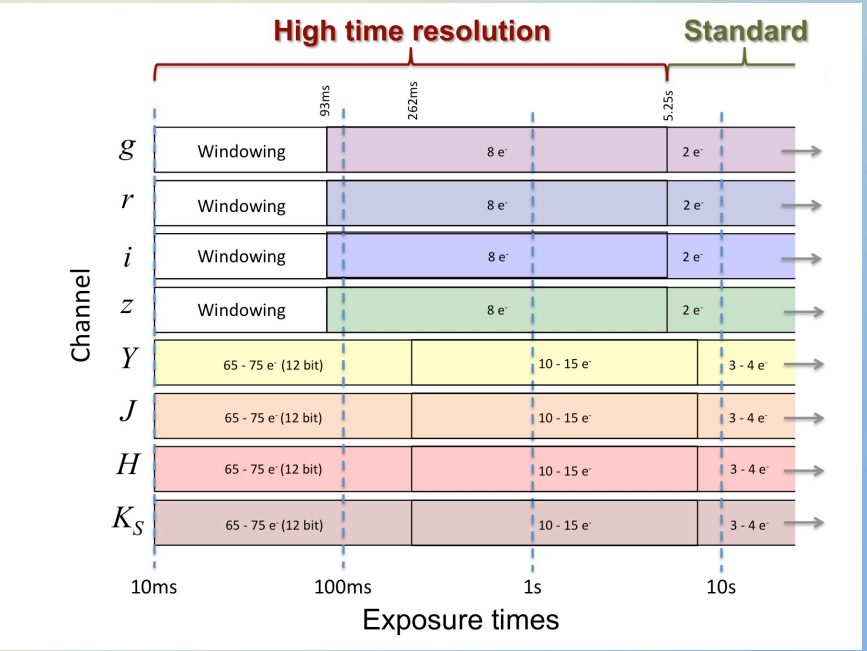

Field-of-view and spatial resolution

OCOTCAM: 3‘x3‘ FoV, 0.18“ sampling

→ GMOS 5.5‘x5.5‘

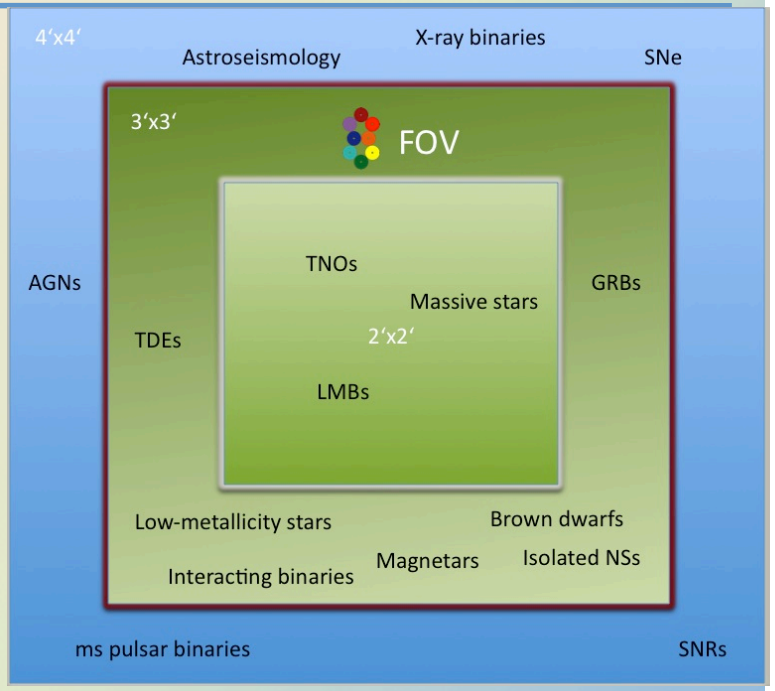

- Most science cases are fine with 3‘x3‘ or smaller
- Larger FoV means significantly more weight&size (larger optical elements)
- Reasonable sampling of the PSF also fits with spectral resolution elements
- Slightly larger FoV (e.g. 3.5‘x3.5‘) might be possible, has not been studied

Add-ons #1: Spectropolarimetry

- Spectropolarimetry across all wavelengths (unique!)
  → potential break-through science
  → Polarimetry not a strong point of Gemini (yet!)
- Easy add-on to the focal plane slit carriage

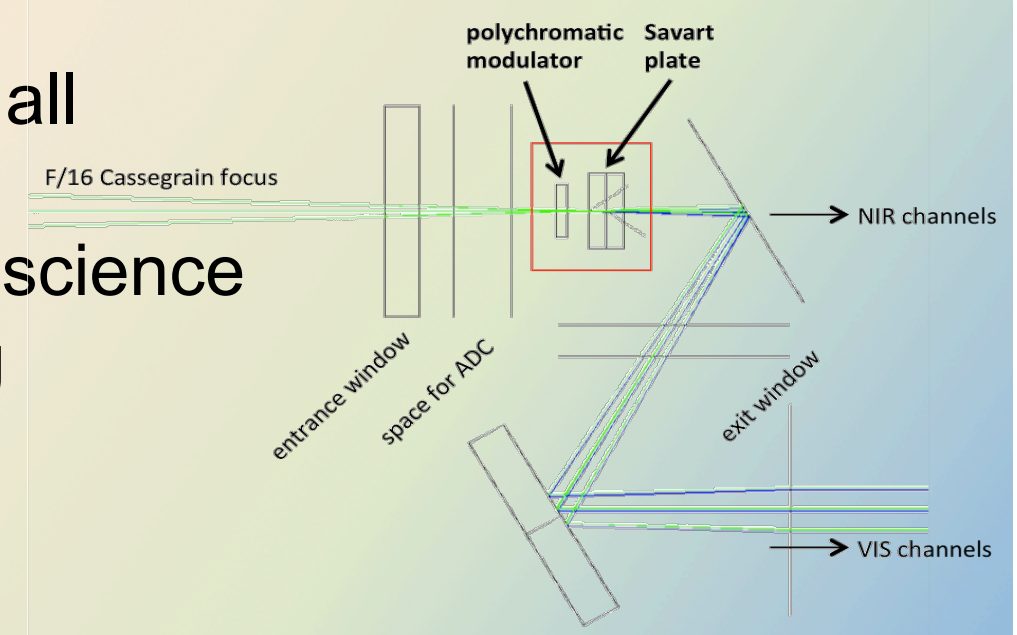

- High-time resolution, single shot spectropolarimetry is possible and still unexplored
- Technology has been demonstrated (Snik et al.)

Add-ons #2: Integral Field Unit

- FoV of 9.7“x6.8“ with 0.4“ slices
- Same coverage as imaging/LS
- currently unique facility!
- Image slicer with slit in focal plane:
  simple add-on to the slit carriage
- Full spectral resolution at any seeing

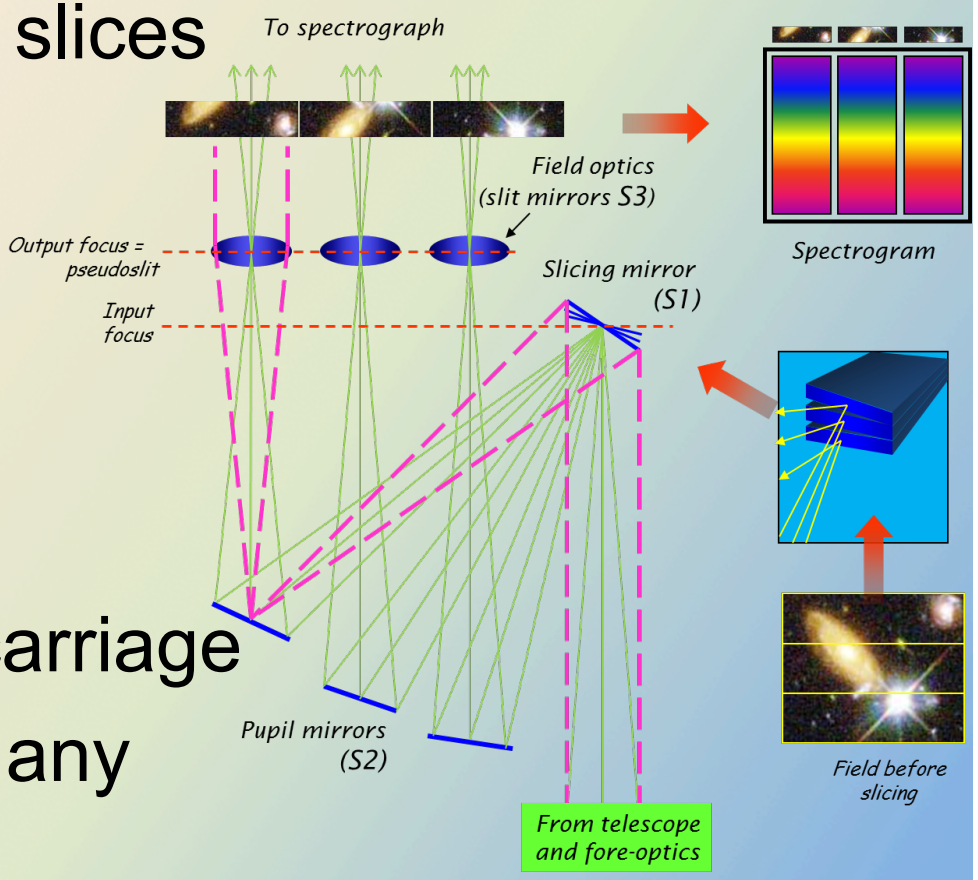

Possible upscopes

- Increase field of view of the instrument (3.5‘x3.5‘)
- Maximum-field IFU (12“x16“) using 1.2“ slits
- Add AO-IFU
- Increase resolution by using larger detectors (1M$ in the VIS, several M$ in the NIR)

Possible downscopes

- Remove *K*-band ➔ >~1M$
- Remove *Y*-band ➔ ~0.5M$
  → lower resolution in Y+z bands
- Remove add-ons ➔ ~300-500k$ each
- Reduce spectral resolution in *g*-band ➔ ~100k€

OCTOCAM

Instrument Design

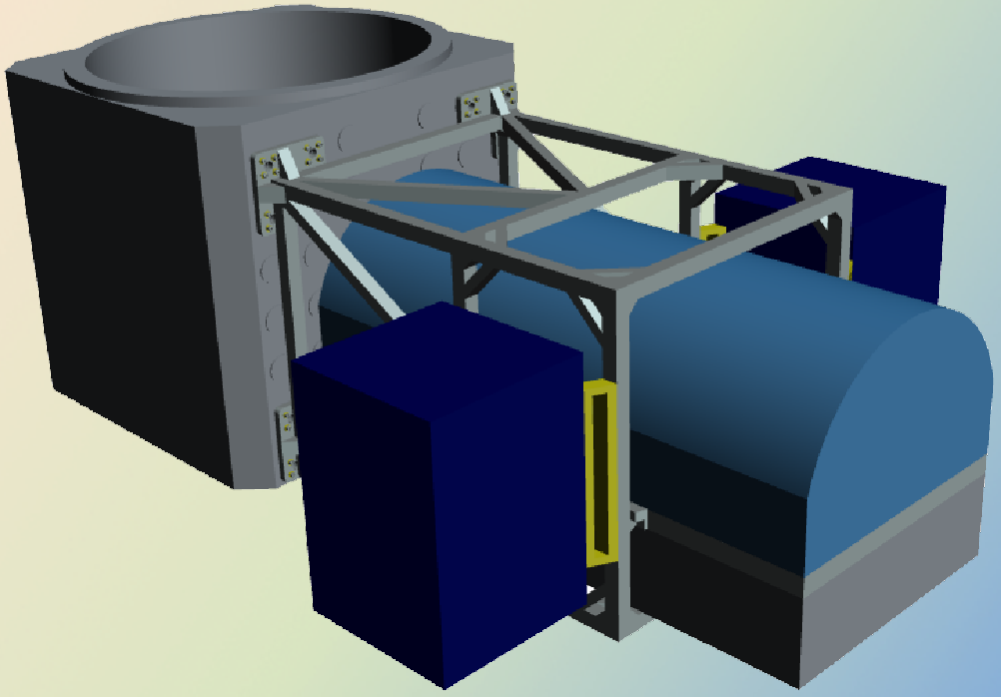

Susan Pope
&
Antonio de Ugarte Postigo

The OCTOCAM consortium

THE GEORGE WASHINGTON UNIVERSITY
WASHINGTON, DC

Fractal

INSTITUTO de ASTROFISICA de ANDALUCIA
CSIC
I·A·A

SwRI

OCTOCAM Systems Engineering Team

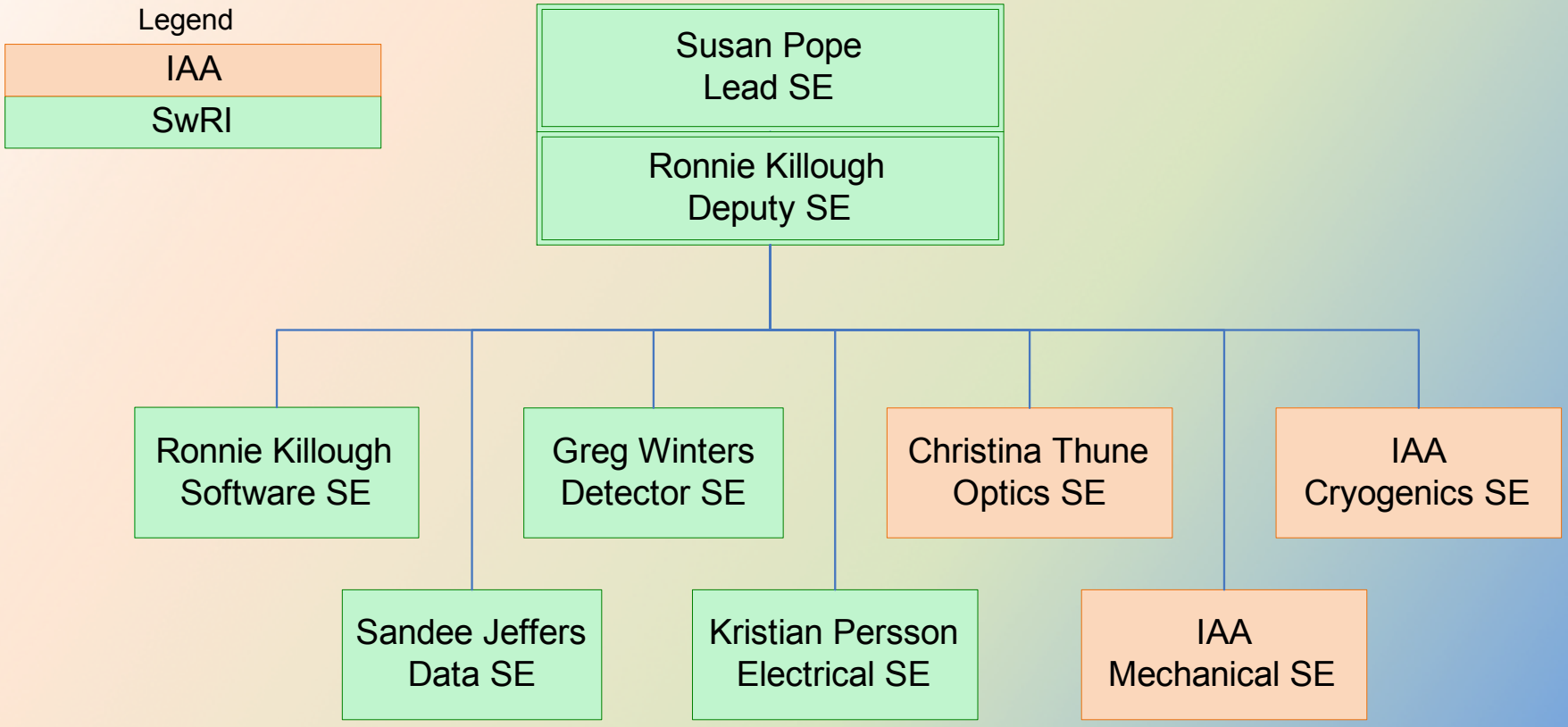

OCTOCAM Document Flowdown

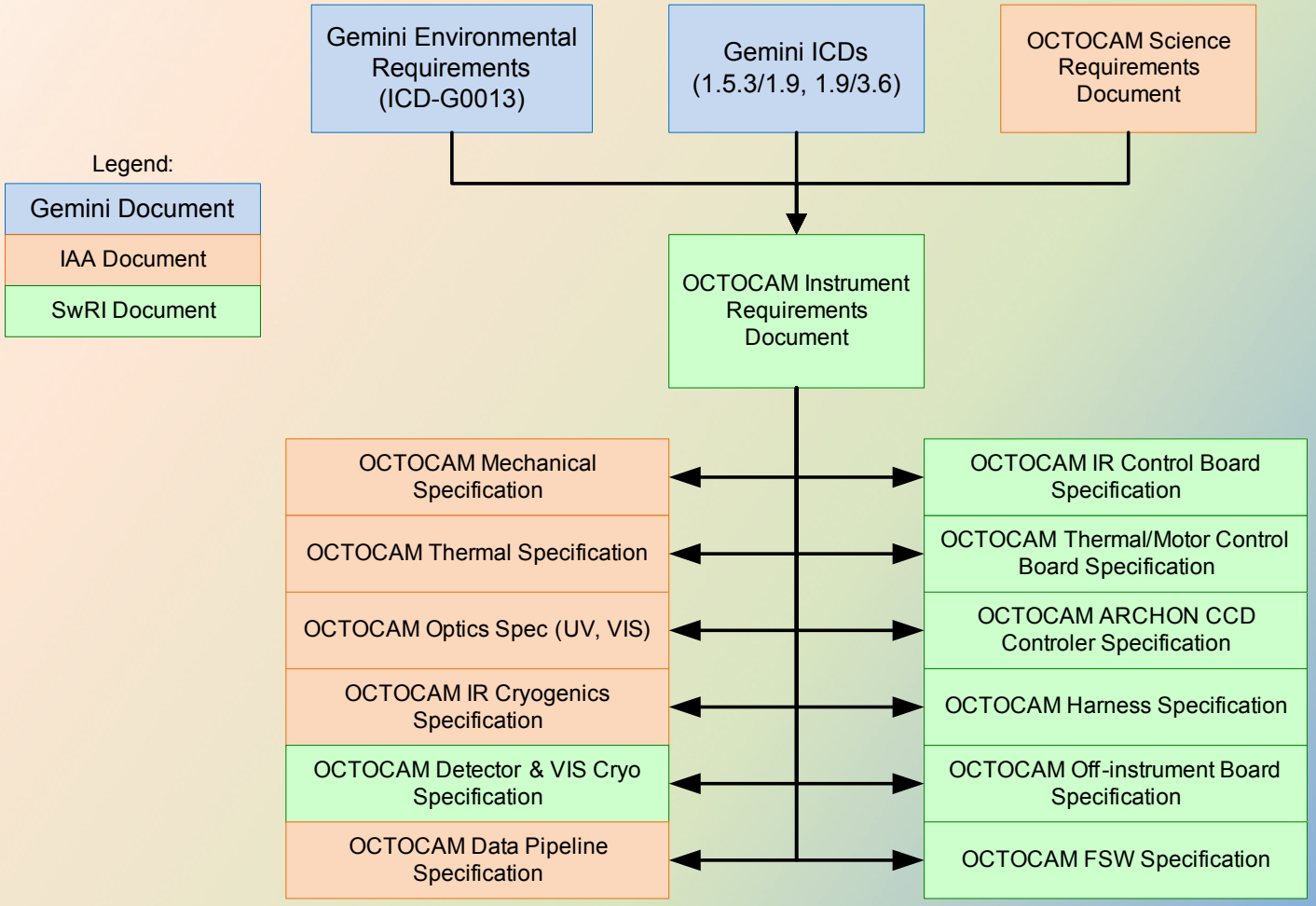

Interface requirements included in these documents

OCTOCAM Requirements Flowdown

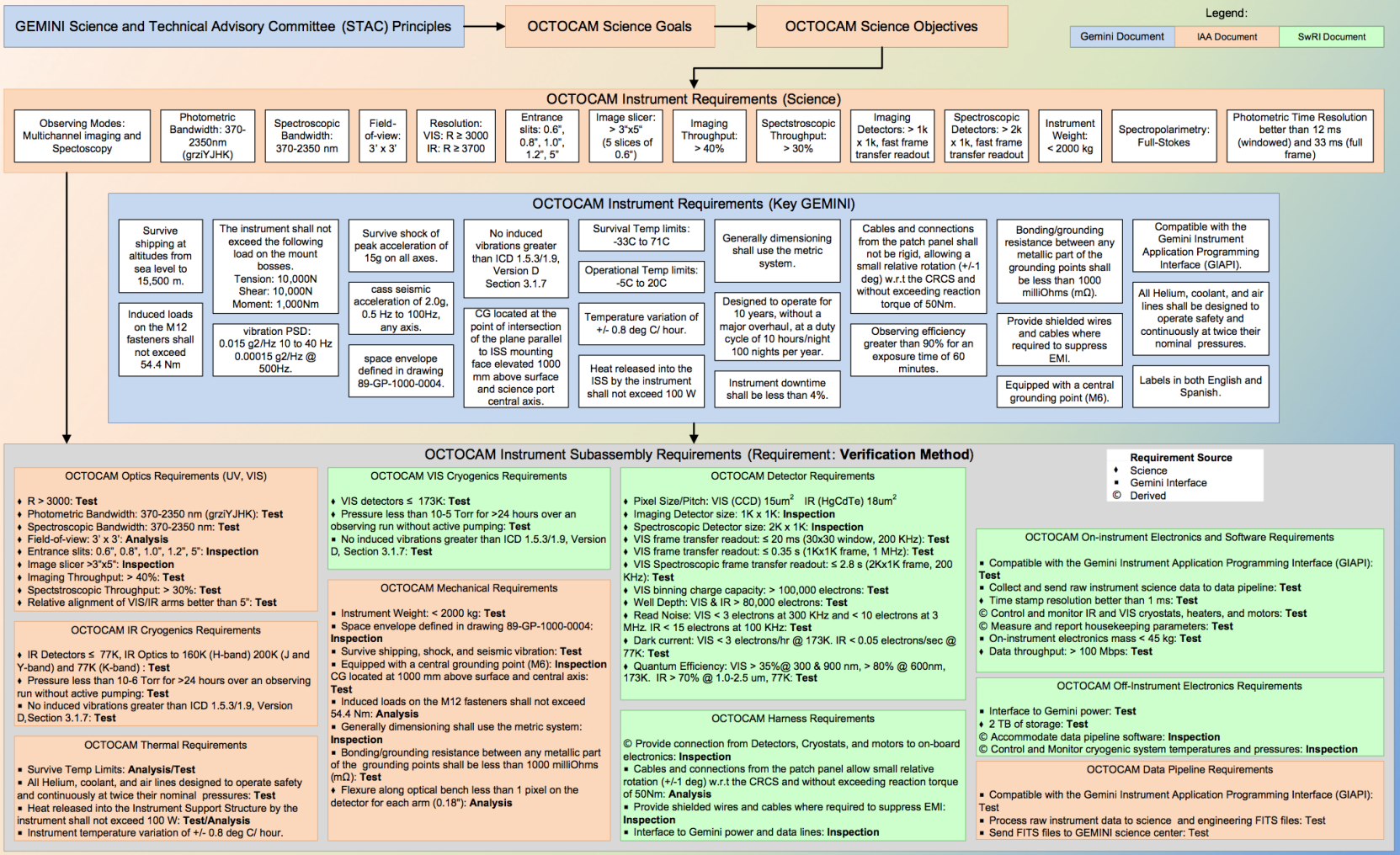

Science Requirements Compliance

Science Requirement	Capability
Observing Modes: Multichannel imaging and Spectoscopy	Compliant
Photometric Bandwidth: 400-2350nm	Compliant
Spectroscopic Bandwidth: 370-2350 nm	Compliant: 370-2350 nm
Field-of-view: 3' x 3'	Compliant: 3.07'x3.07'
Resolution: R > 3000	Compliant: R = 3000 to 4000
Entrance slits: 0.6", 0.8", 1.0", 1.2", 5"	Compliant
Image slicer: > 3"x5"	Compliant: 9.7"x6.8"
Imaging Throughput: > 40%	Compliant: 41%
Spectroscopic Throughput: > 30%	Compliant: 33%
Imaging Detectors: > 1k x 1k, fast frame transfer readout	Compliant
Spectroscopic Detectors: > 2k x 1k, fast frame transfer readout	Compliant
Instrument Weight: < 2000 kg	Compliant: 1854 kg
Spectropolarimetry: Full-Stokes	Compliant
Photometric Time Resolution better than 100 ms	~ 100 ms 1kx1k full frame

Specifications

Simultaneous spectral range	Photometry: *grizYJHK* Spectroscopy: 3700-23500 Å
Field of view	***Imaging: 3'x3'*** ***Spectroscopy: 3' Long slit*** ***9.7"x6.8" IFU***
Plate scale	0.18"/pixel
Spectral resolution	*3 000 - 4 000* ***standard VPH***
Expected efficiency	Imaging: ~41% Spectroscopy: ~33%
Maximum full-frame rate	***~ 10 Hz full frame - ~ 100 Hz windowed***
Observing modes	Multiband imaging Wide band spectroscopy (long slit, IFU) High time-resolution Spectropolarimetry

Instrument Scheme

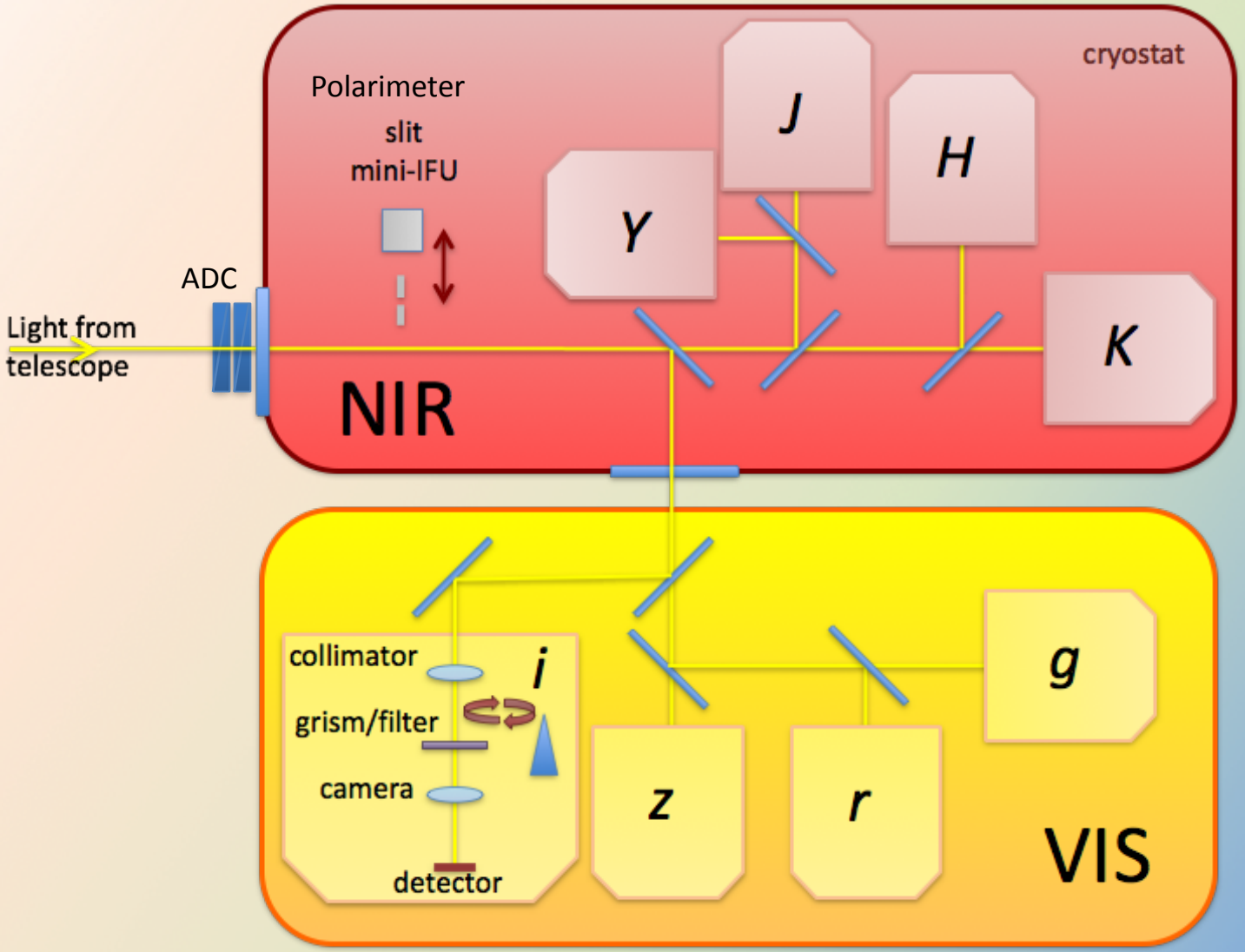

Optical design

- Atmospheric Dispersion Corrector
- Common focal plane
- Dichroics
- Grisms
- Optical quality
- Efficiency

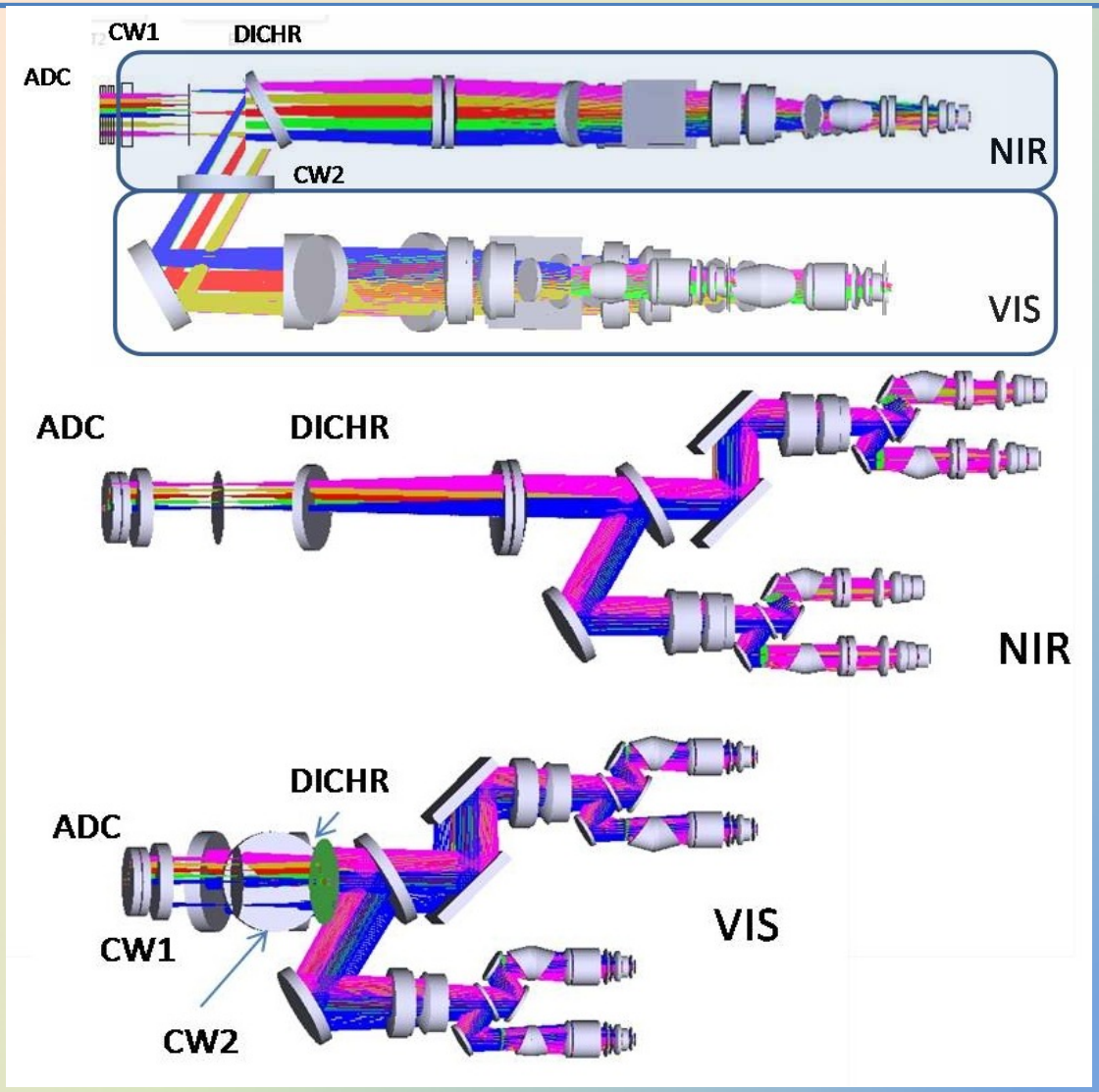

Atmospheric Dispersion Corrector

- Necessary to avoid slit losses
- Optimized up to 50 deg Zenithal distance
- 89% efficiency from 3900 to 22000 Å
- Can be still optimized

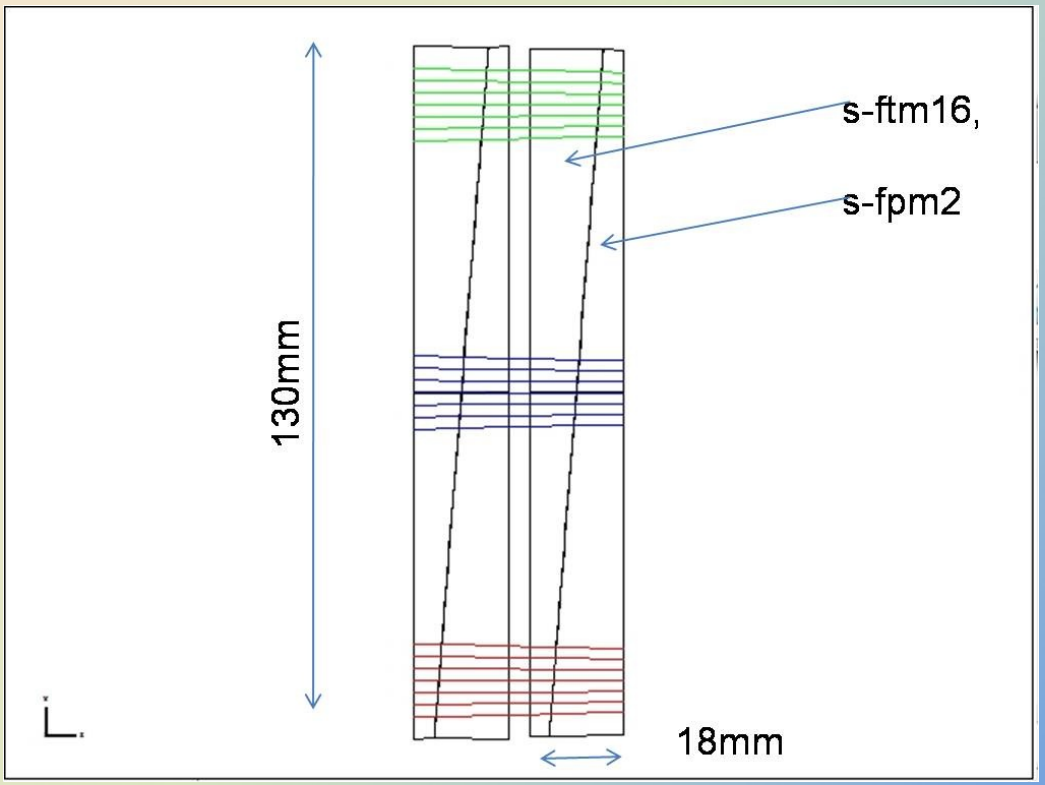

Atmospheric Dispersion Corrector

- Necessary to avoid slit losses
- Optimized up to 50 deg Zenithal distance
- 89% efficiency from 3900 to 22000 Å
- Can be still optimized

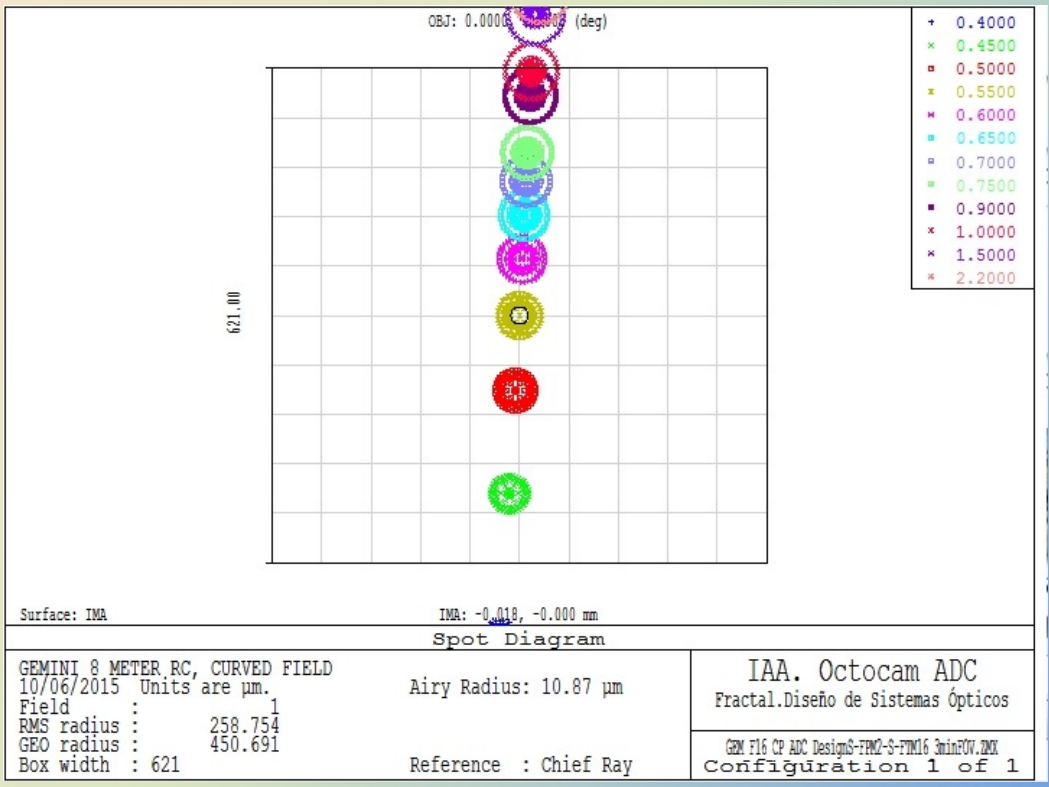

Atmospheric Dispersion Corrector

- Necessary to avoid slit losses
- Optimized up to 50 deg Zenithal distance
- 89% efficiency from 3900 to 22000 Å
- Can be still optimized

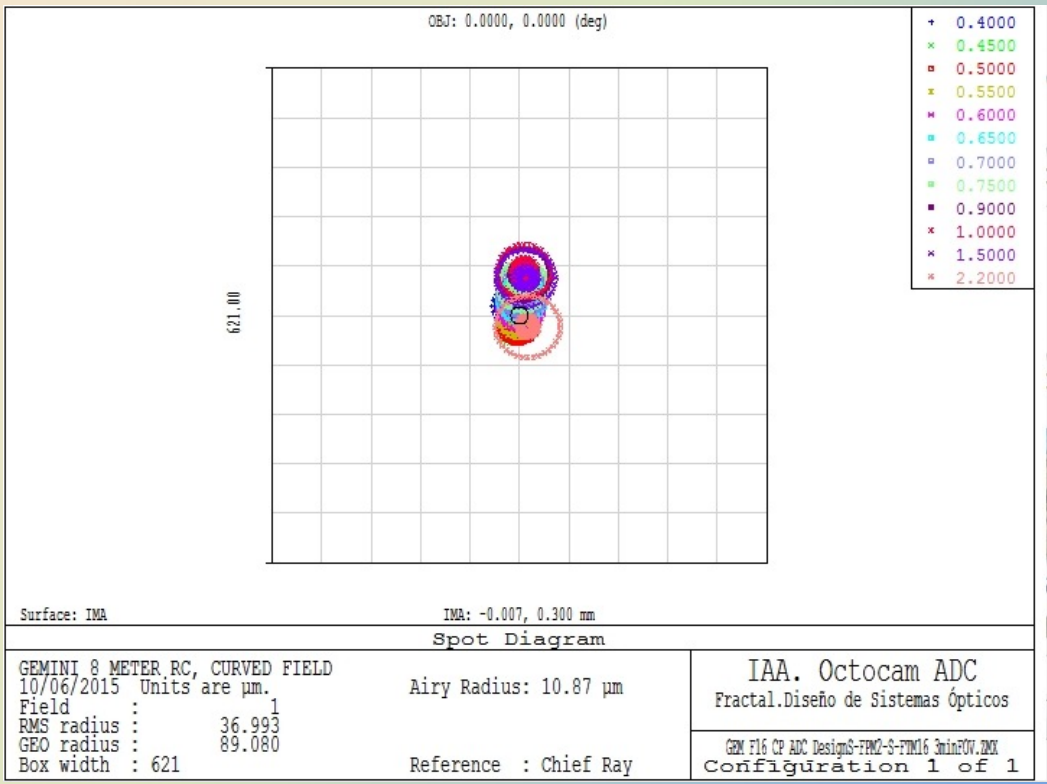

Atmospheric Dispersion Corrector

- Necessary to avoid slit losses
- Optimized up to 50 deg Zenithal distance
- 89% efficiency from 3900 to 22000 Å
- Can be still optimized

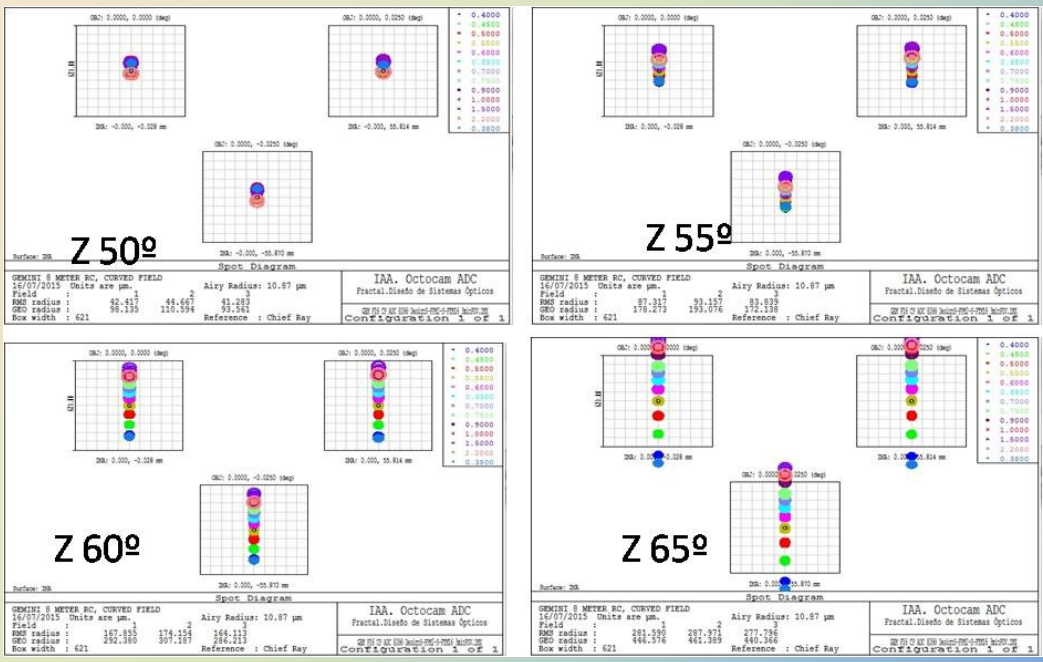

Dichroics

- Each arm passes through 3 dichroics, each with better than 98% efficiency

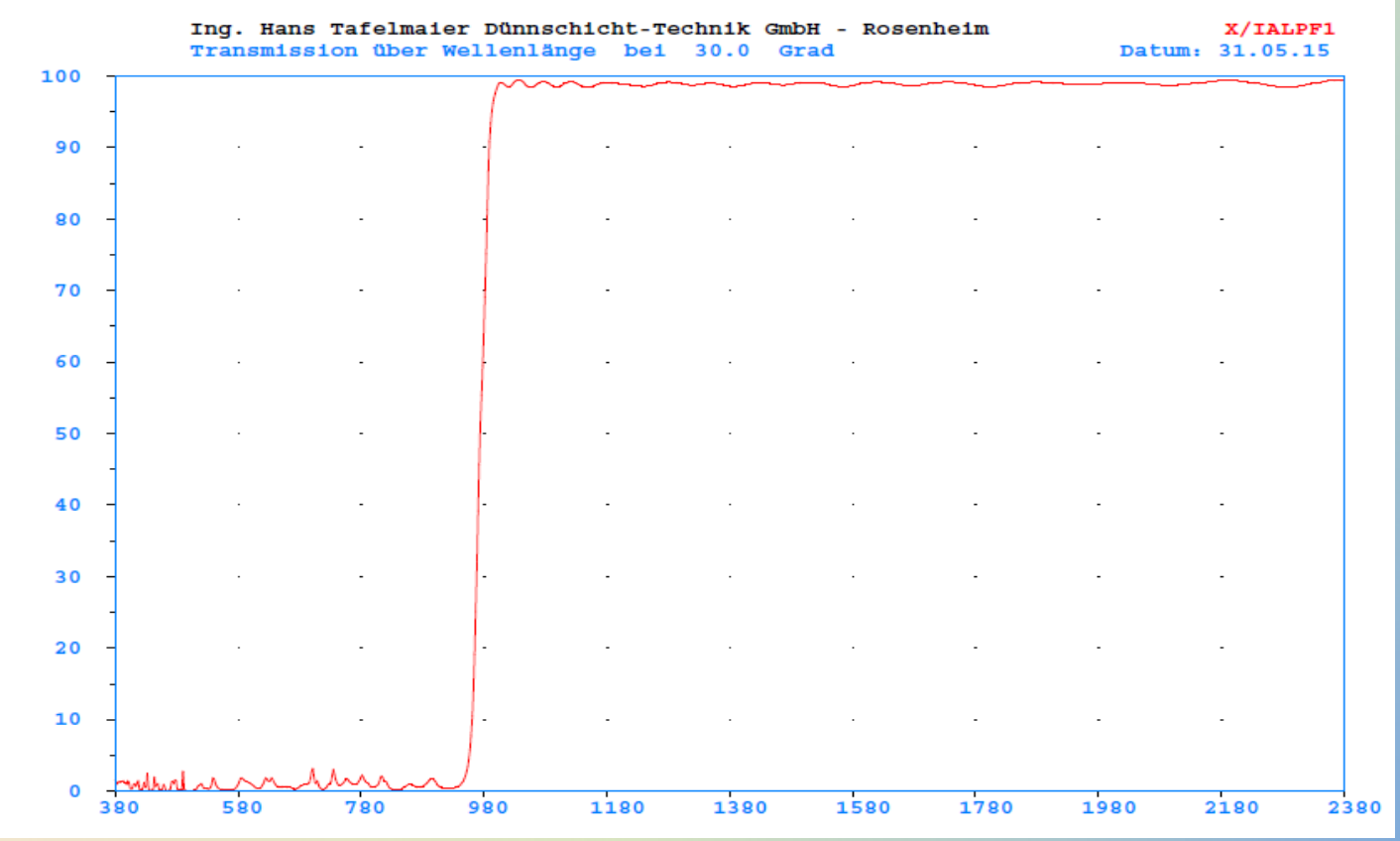

Broadband coatings

- Broadband coatings in the complete range are complex but available
- Calculations assumed a mean efficiency loss of 2.3%
- We have found coatings available with losses < 2% in the complete range

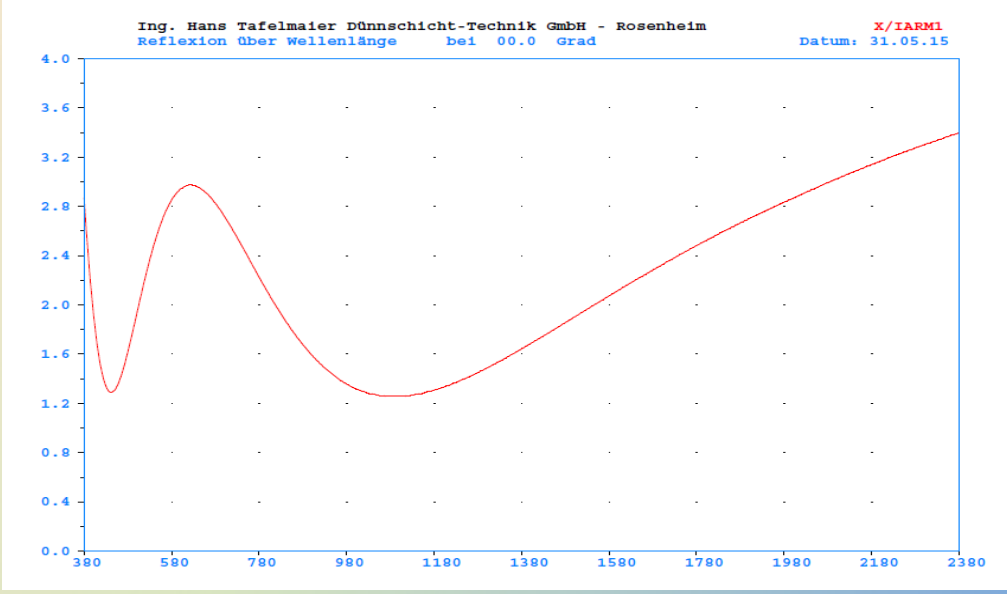

Broadband coatings

- Broadband coatings in the complete range are complex but available
- Calculations assumed a mean efficiency loss of 2.3%
- We have found coatings available with losses < 2% in the complete range

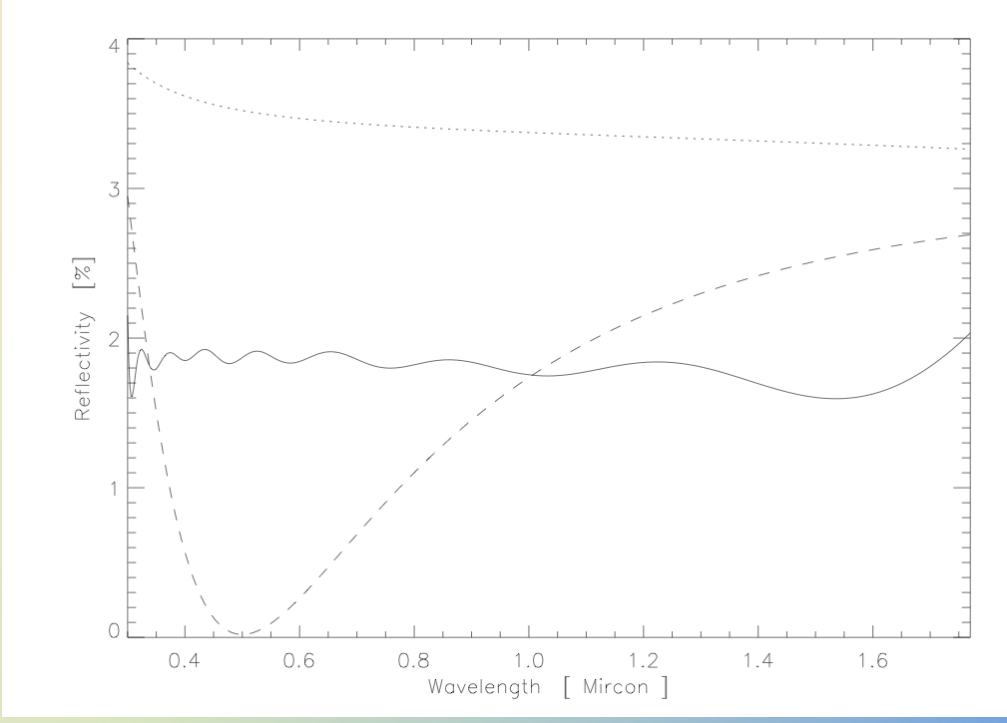

Grisms

- Volume phase holographic grisms
- Very efficient in a small wavelength range (~85% centre, 60% edges)

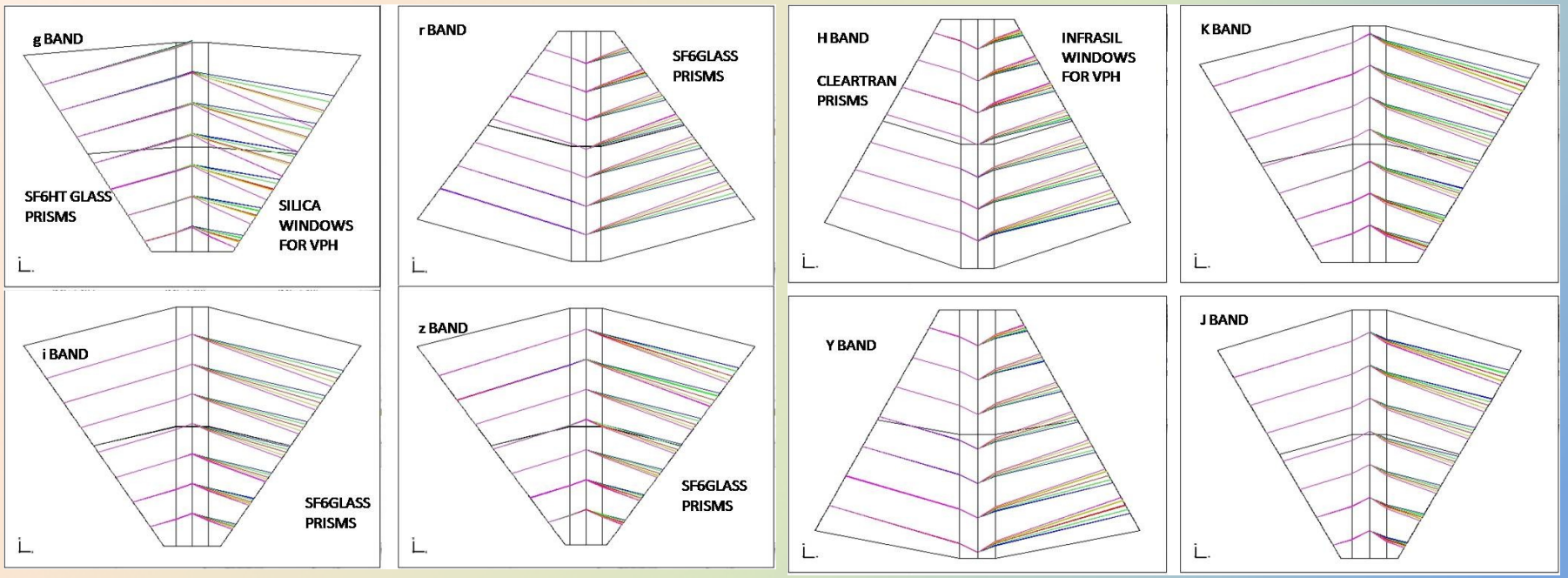

Image format

- To increase the spectral resolution we use a different format for imaging and spectroscopy
- 1k x 1k imaging
- 1k x 2k spectroscopy (1k x 4k in g-band)

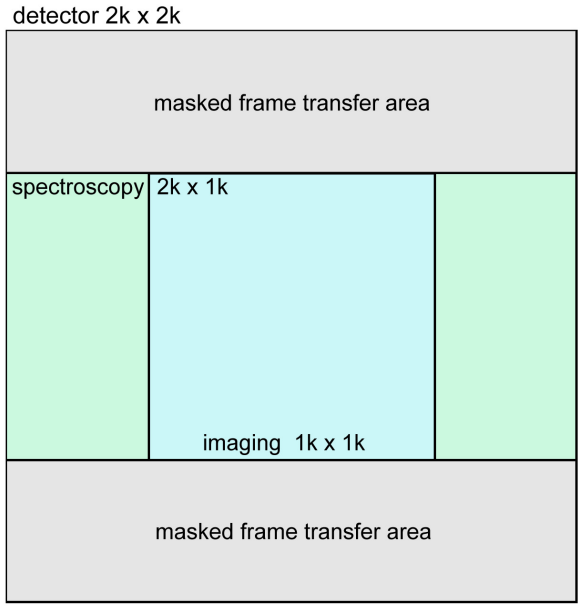

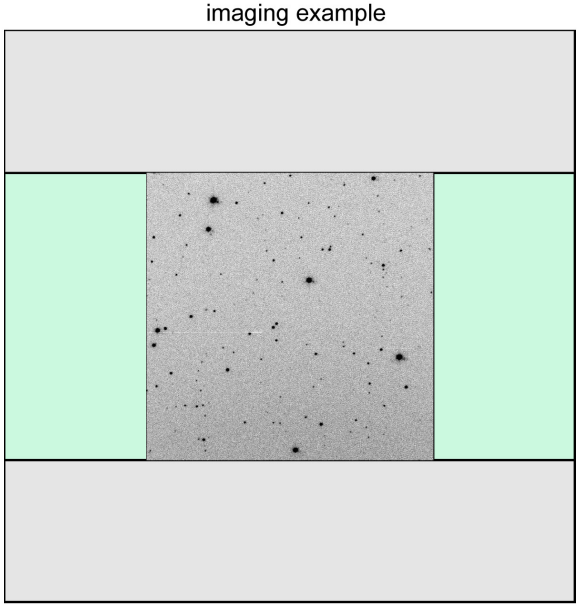

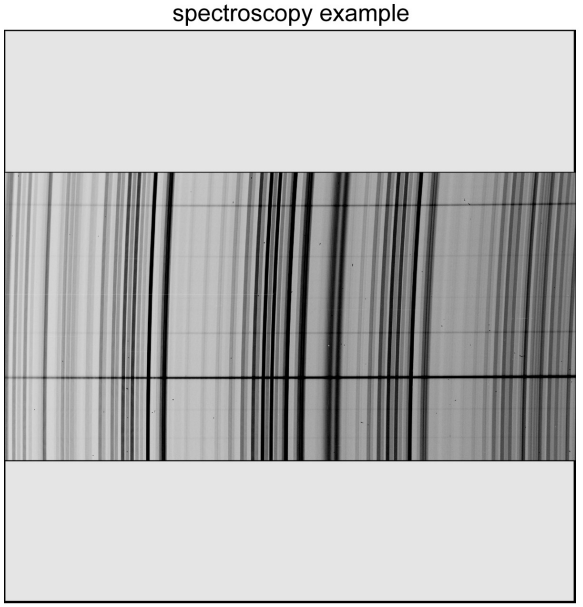

Optical quality

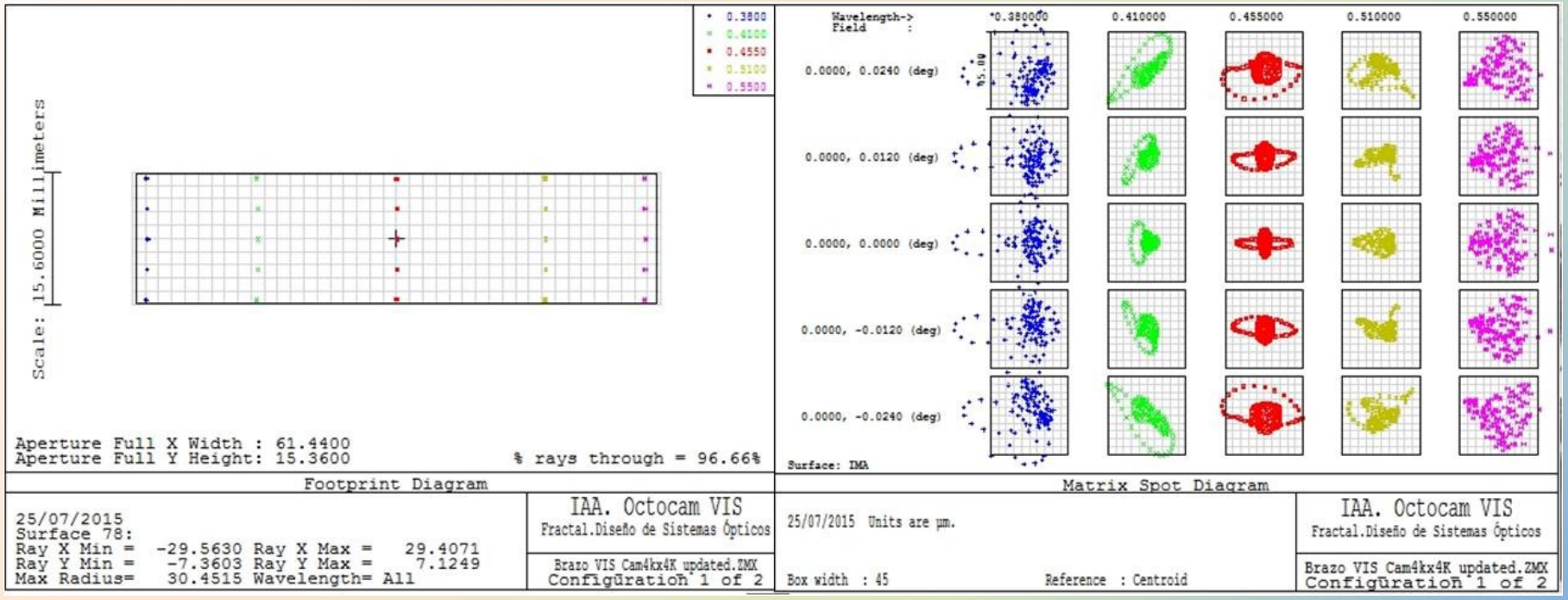

	g	r	i	z
EED at 80%(in pixels)	1.7	1.7	1.6	1.6

	Y	*J*	*H*	*K*
EED at 80% (in pixels)	1.8	1.7	1.7	1.4

Efficiency

- ADC. Internal absorption and 2.5% loss per air/glass surface
- CW1. Coating loss 2.3%.
- CW2. Coating VIS Loss 1.5%
- Collimator. Internal absorption and 1.5% per air/glass
- VPH. Hologram central efficiency of 0.85, 0.6 at edge. Loss prisms (1.5%/surface).
- Camera. Internal absorption and 1.5% per air/glass.
- Dichroics - T in transmission > 0.985 per surface.
- Dichroics - R in reflection. 0.98.
- Folders. Gold (0.99), silver and Aluminium (0.98)

	g	*r*	*i*	*z*
Wavelength (nm)	455	620	745	880
ADC	0.873	0.890	0.891	0.891
CW1	0.954	0.954	0.954	0.954
DICHR-R	0.980	0.980	0.980	0.980
CW2	0.970	0.970	0.970	0.970
COLLIMATOR	0.817	0.870	0.880	0.879
VPH	0.820	0.820	0.820	0.820
CAMERA	0.860	0.863	0.867	0.866
DICHR-T	0.940(2)	0.970	0.970 (1)	-
DICHR-R	0.980 (1)	0.960 (2)	0.960 (2)	0.940 (3)
FOLDERS	0.920 (2)	0.940 (3)	0.940 (3)	0.920 (4)
TOTAL	**0.39**	**0.43**	**0.44**	**0.43**

	Y	*J*	*H*	K_S
Wavelength (microns)	1.04	1.25	1.62	2.175
ADC	0.895	0.895	0.890	0.830
CW1	0.954	0.954	0.954	0.954
DICHR-R	0.960	0.960	0.960	0.960
COLLIMATOR	0.830	0.830	0.810	0.710
VPH	0.820	0.820	0.820	0.820
CAMERA	0.830	0.830	0.821	0.760
DICHR-T	0.940 (2)	0.970	0.970 (1)	-
DICHR-R	0.980 (1)	0.960 (2)	0.960 (2)	0.940 (3)
FOLDERS	0.980 (2)	0.970 (3)	0.970 (3)	0.960(4)
TOTAL	**0.42**	**0.42**	**0.40**	**0.30**

Dichroic Cubes & Double Gratings



- More compact
- Less optics
- Higher resolution
- Coatings are still an issue

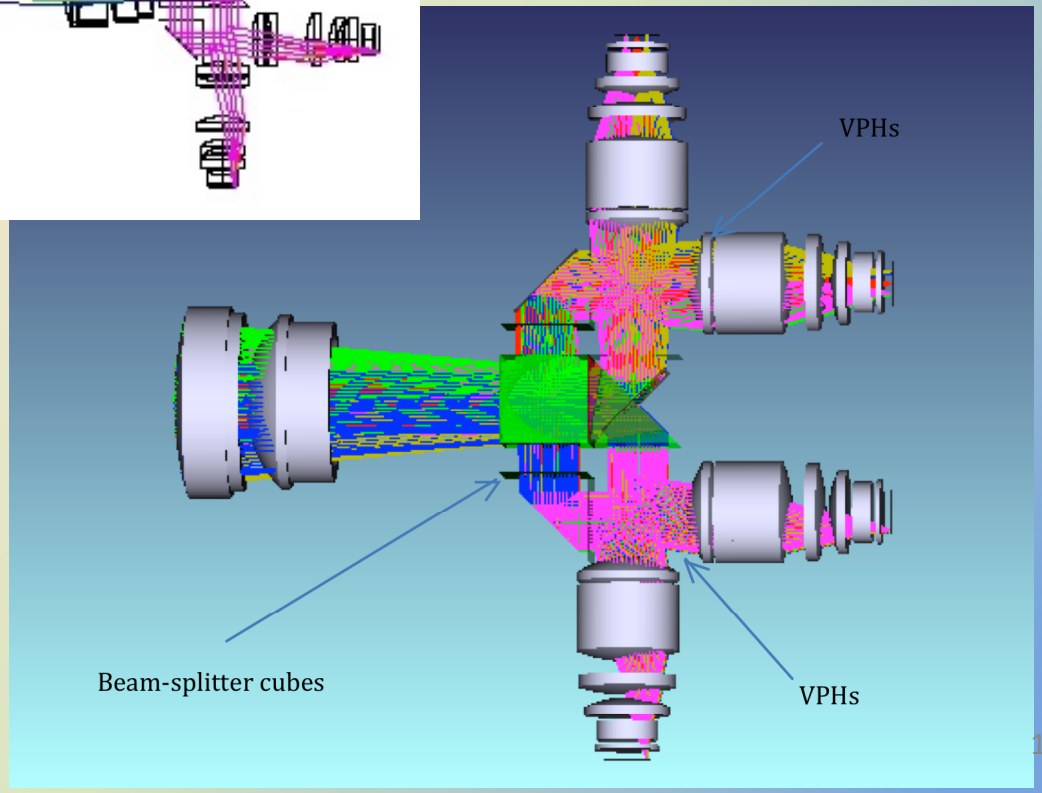

Dichroic Cubes & Double Gratings



Dichroic Cubes & Double Gratings

- Gratings change path to a different camera/ detector
- Higher incidence angle increases resolution keeping a small pupil
- Double gratings feed two arms with a single element

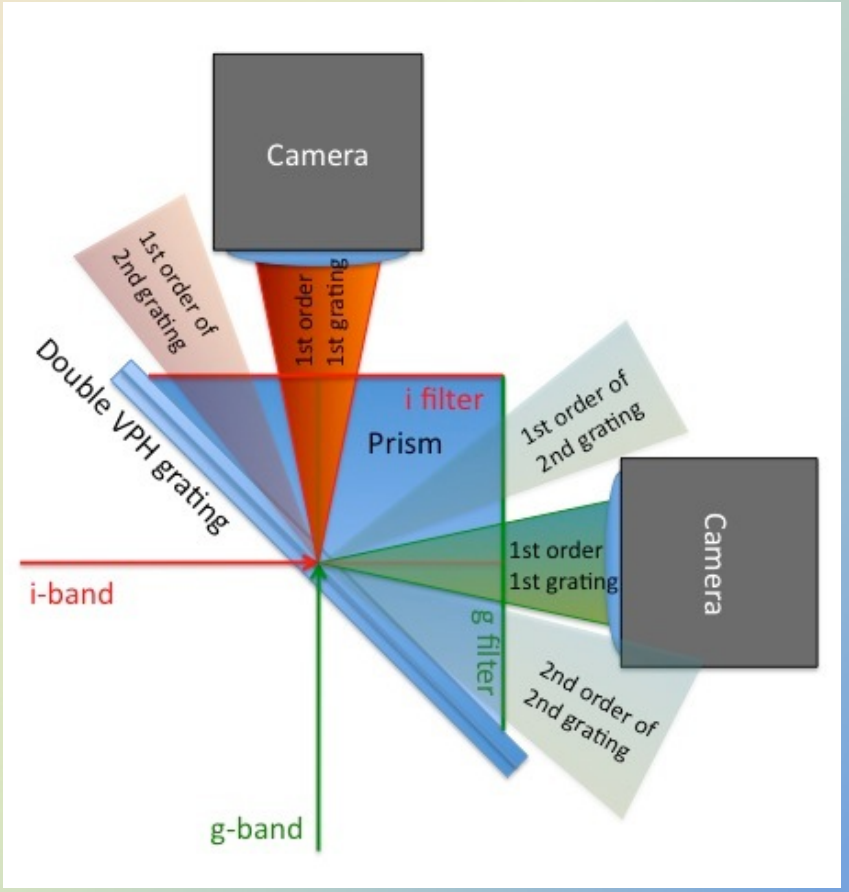

Mechanical design

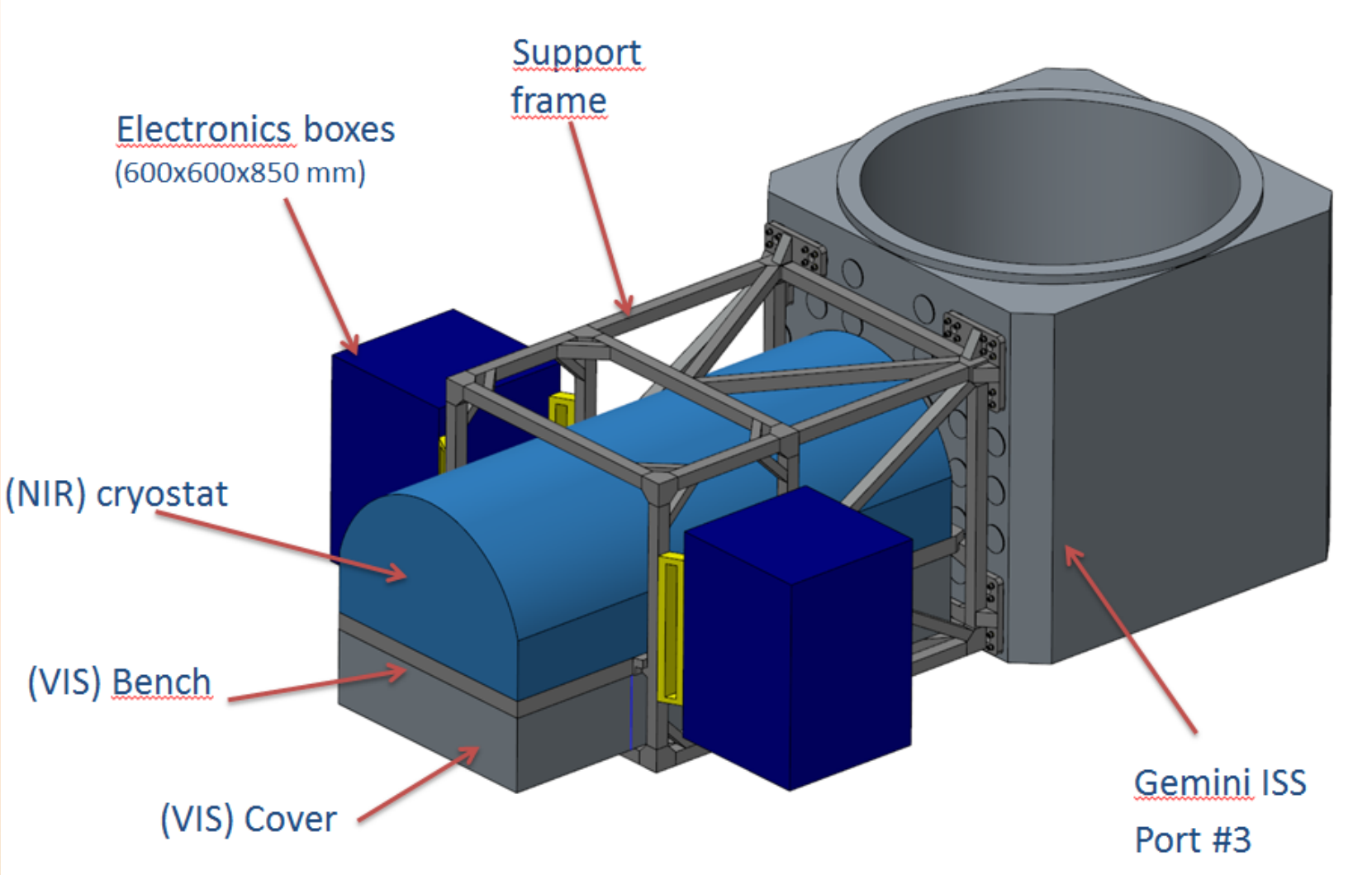

Mechanical design

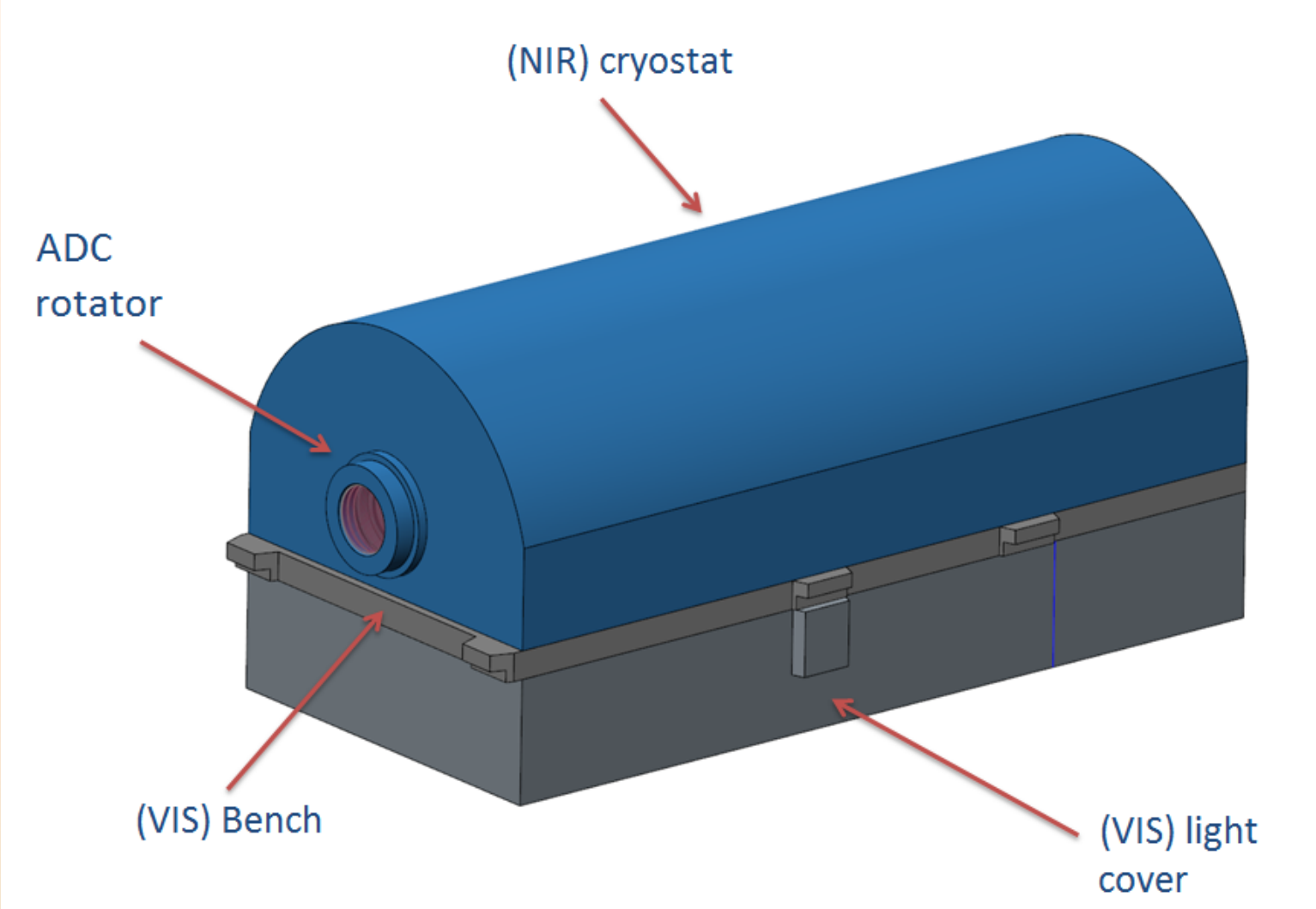

NIR cryostat and optics

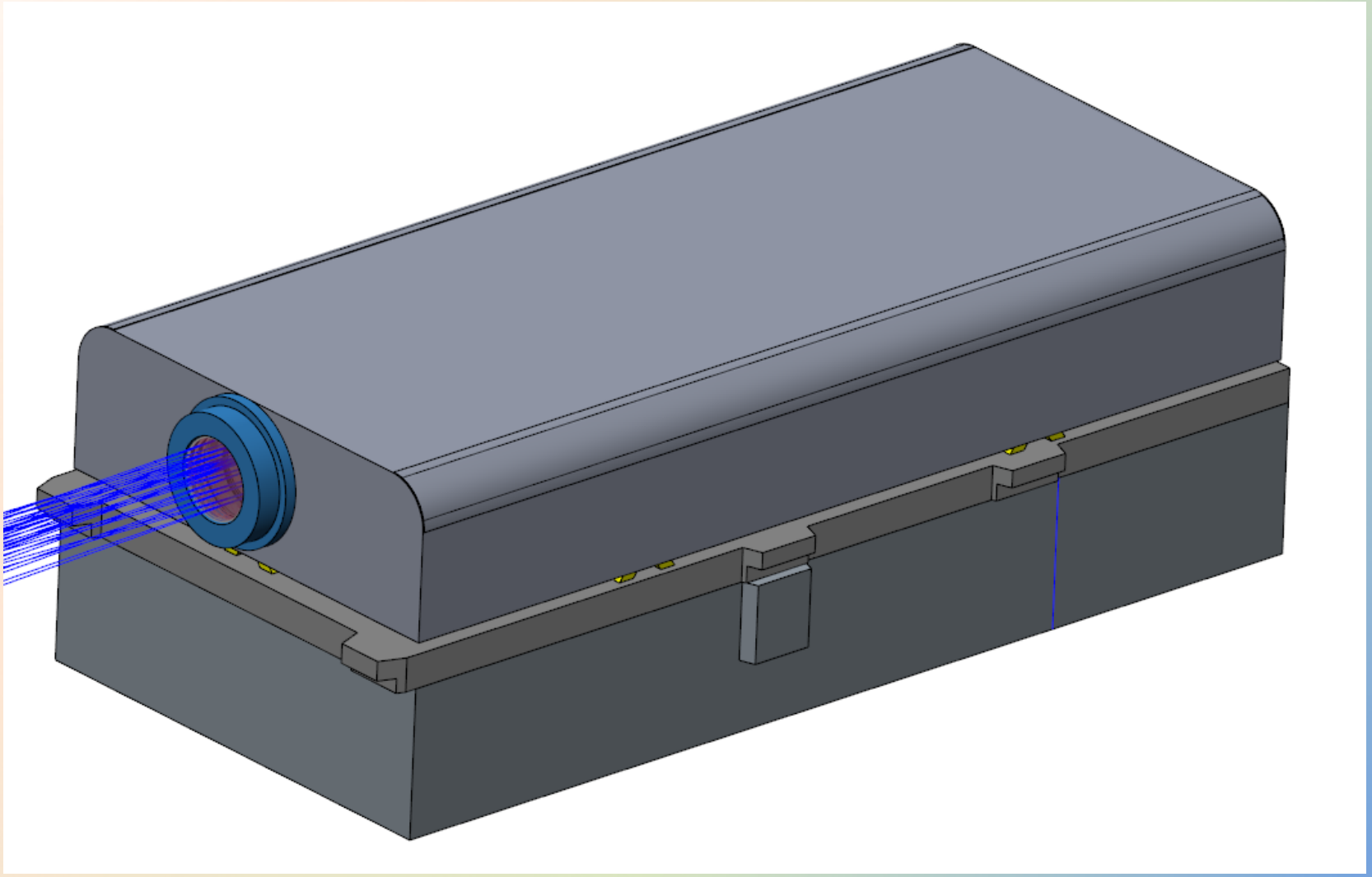

NIR cryostat and optics

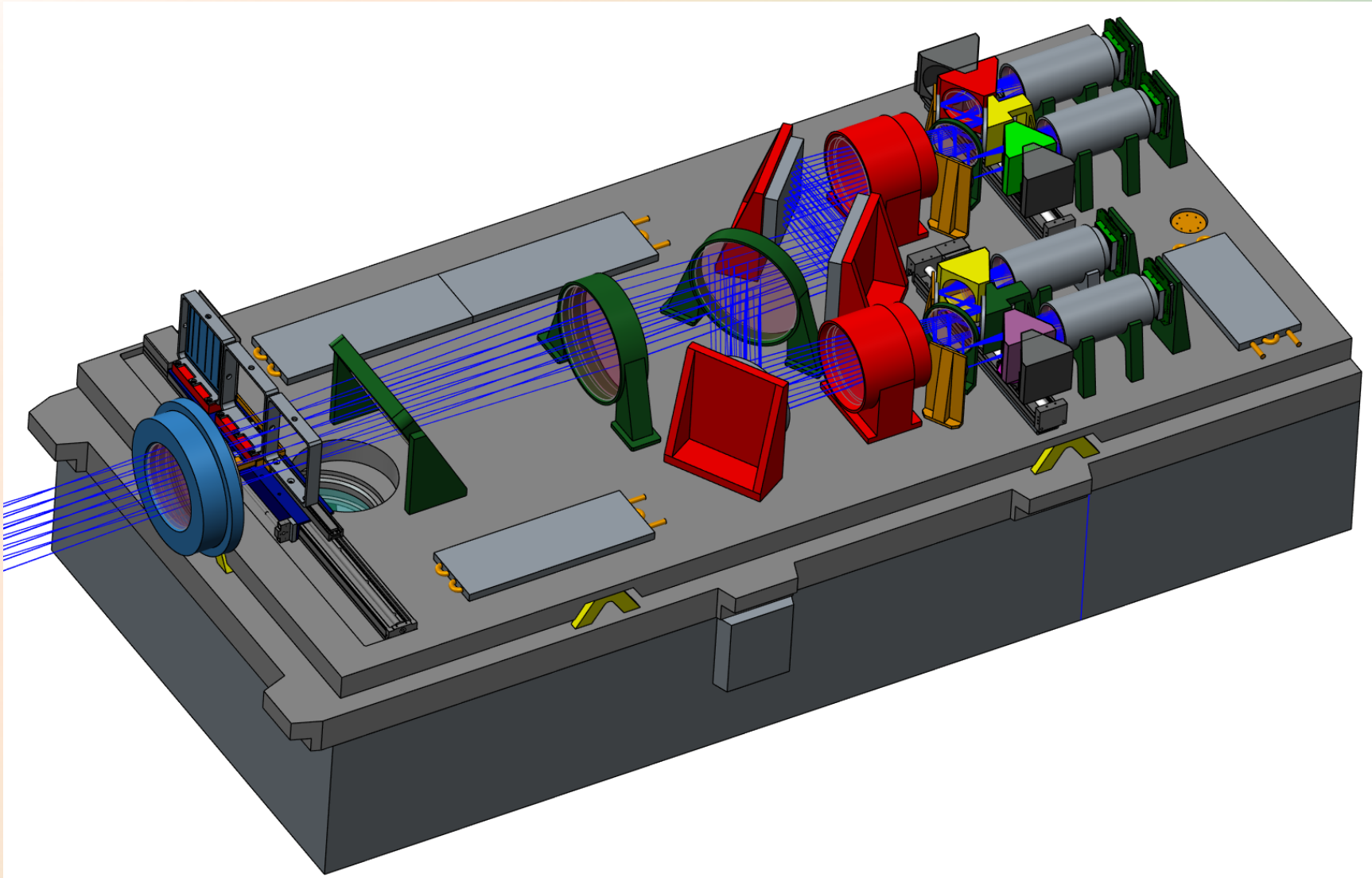

NIR cryostat and optics

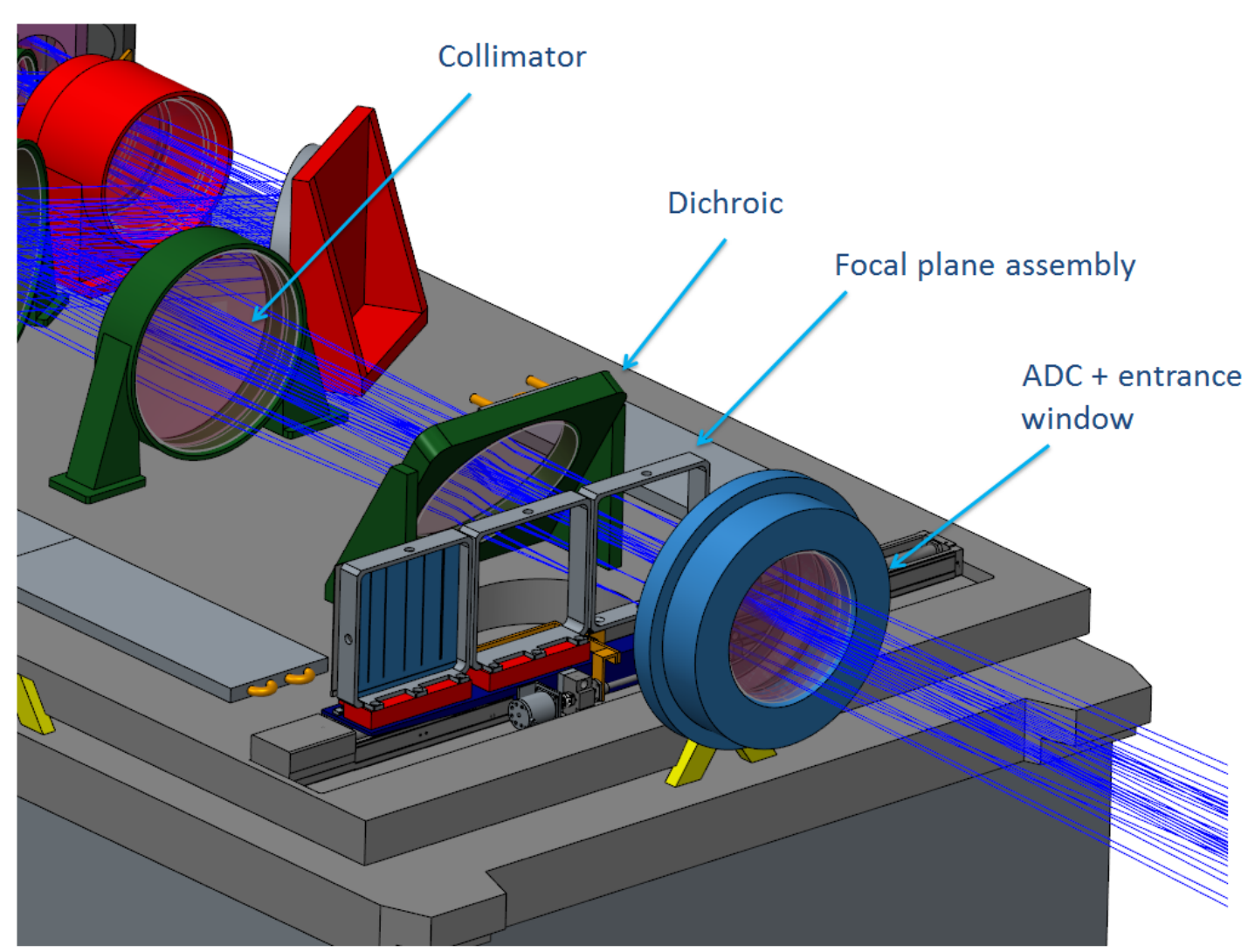

NIR cryostat and optics

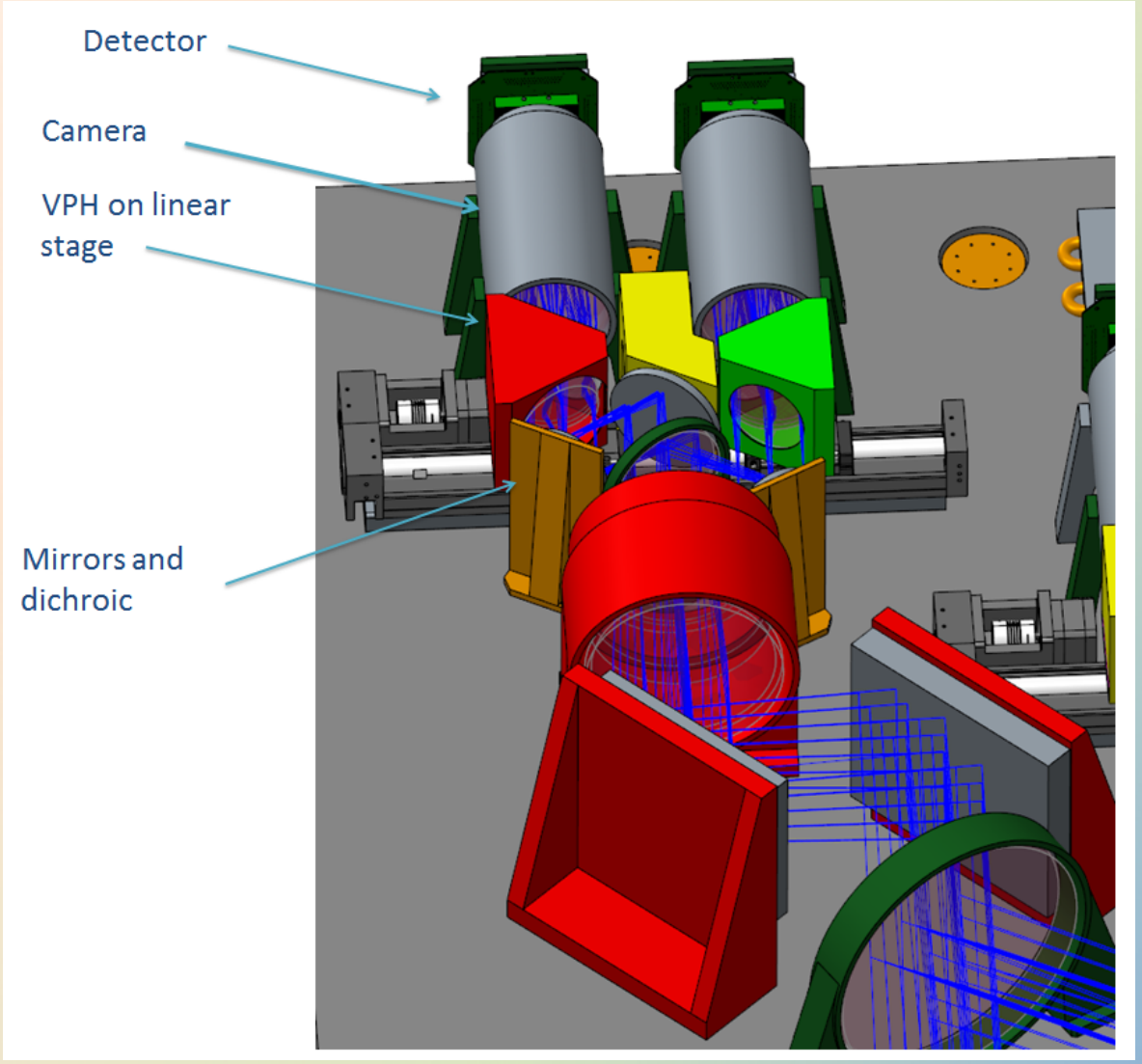

VIS arm

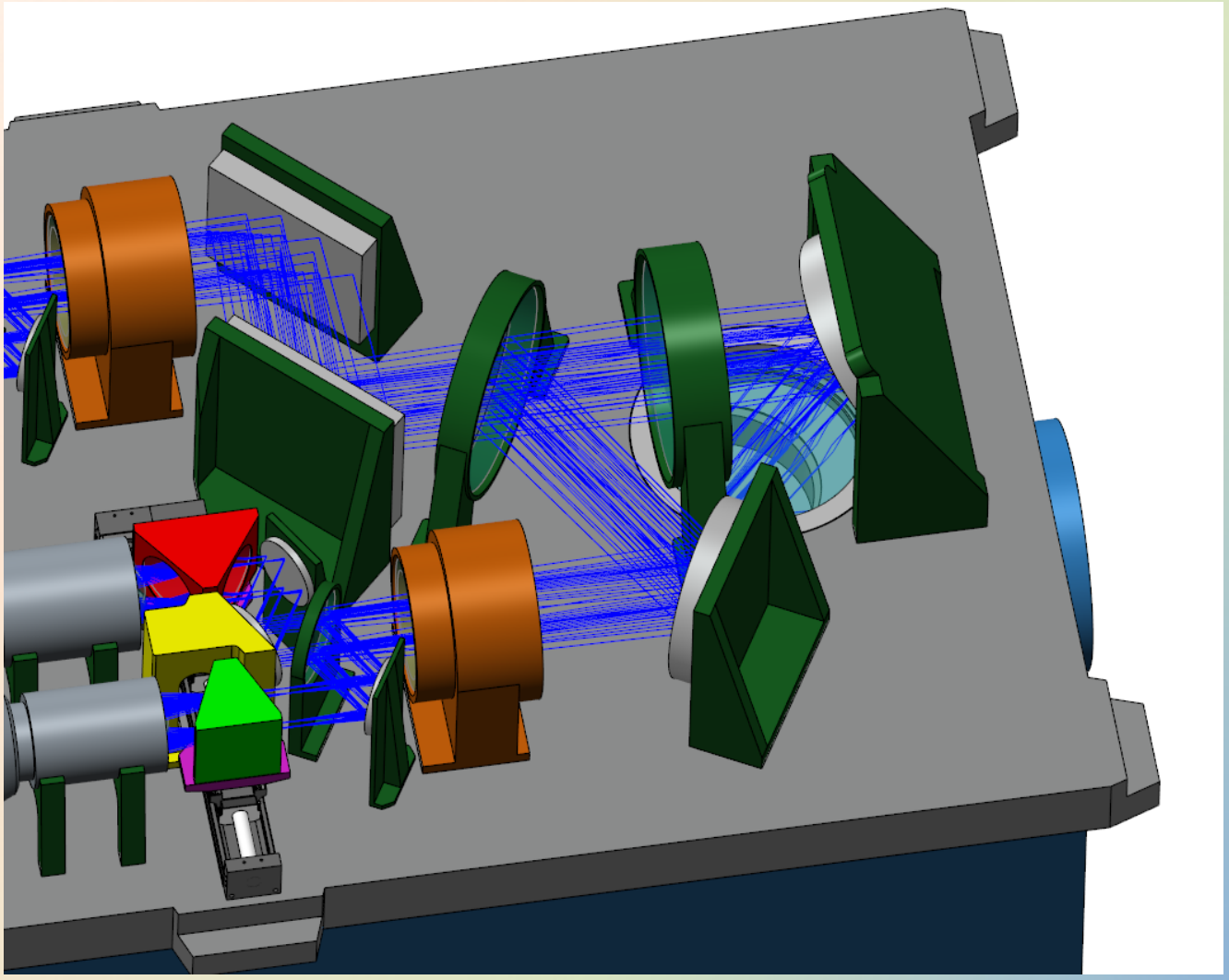

VIS arm

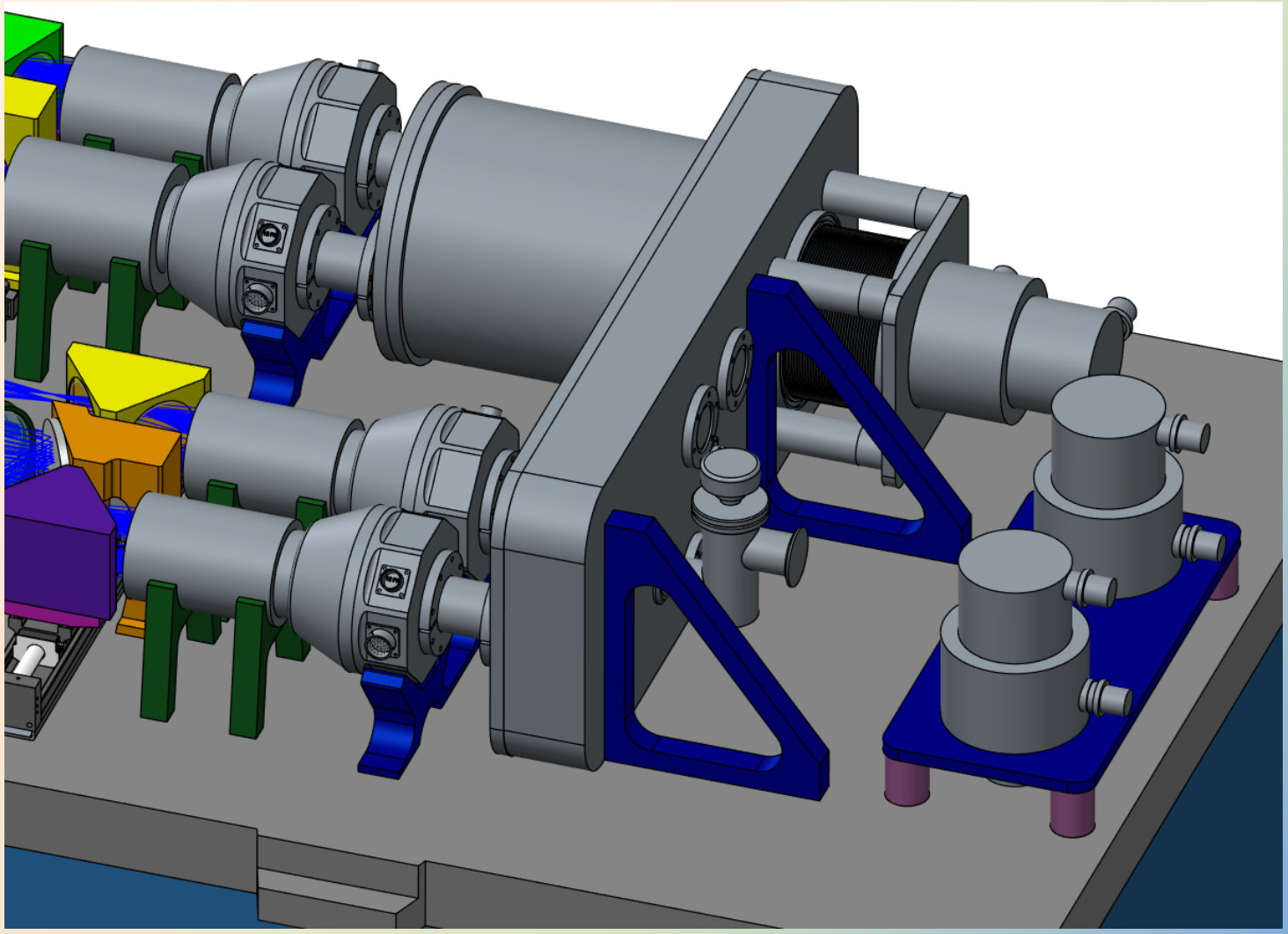

VIS arm

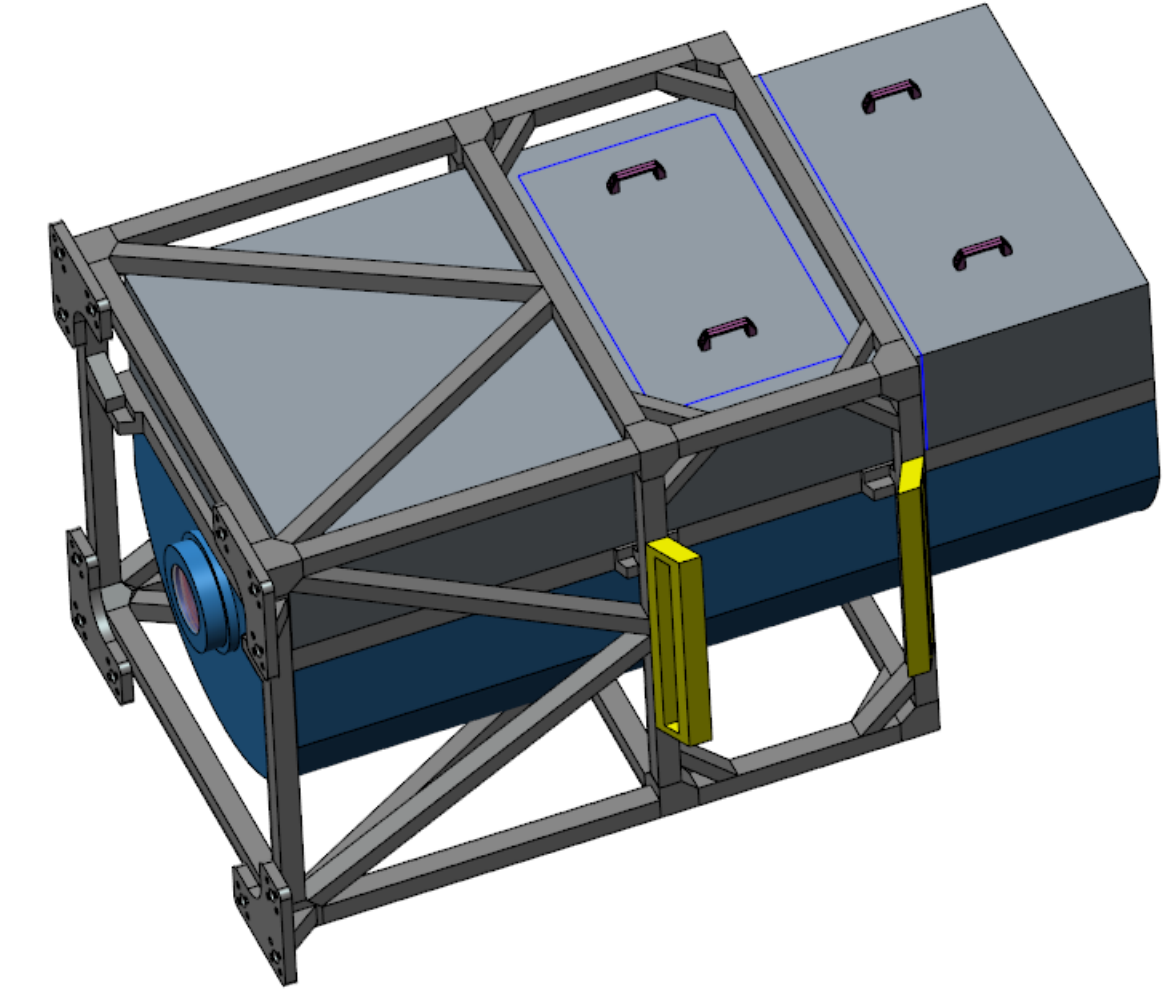

VIS arm

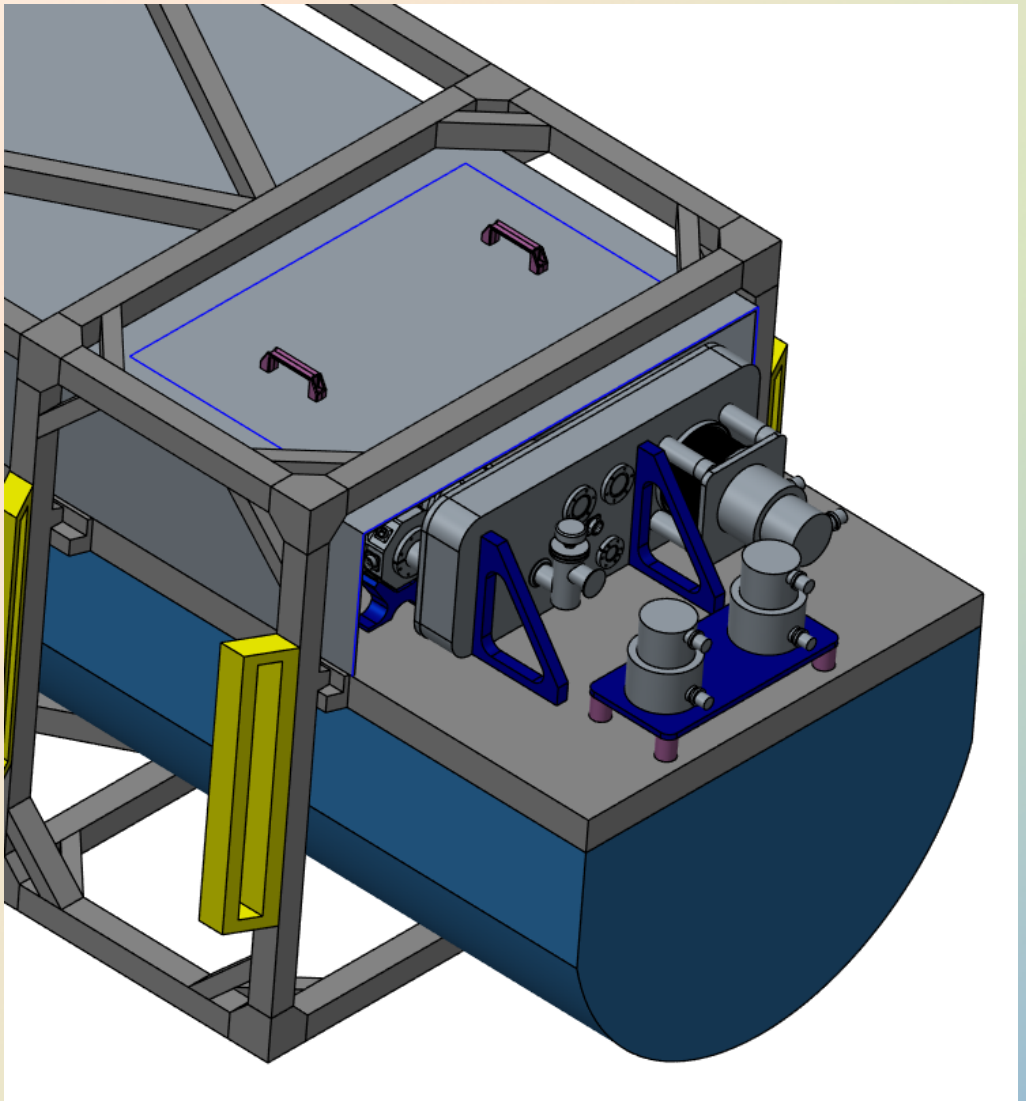

VIS arm

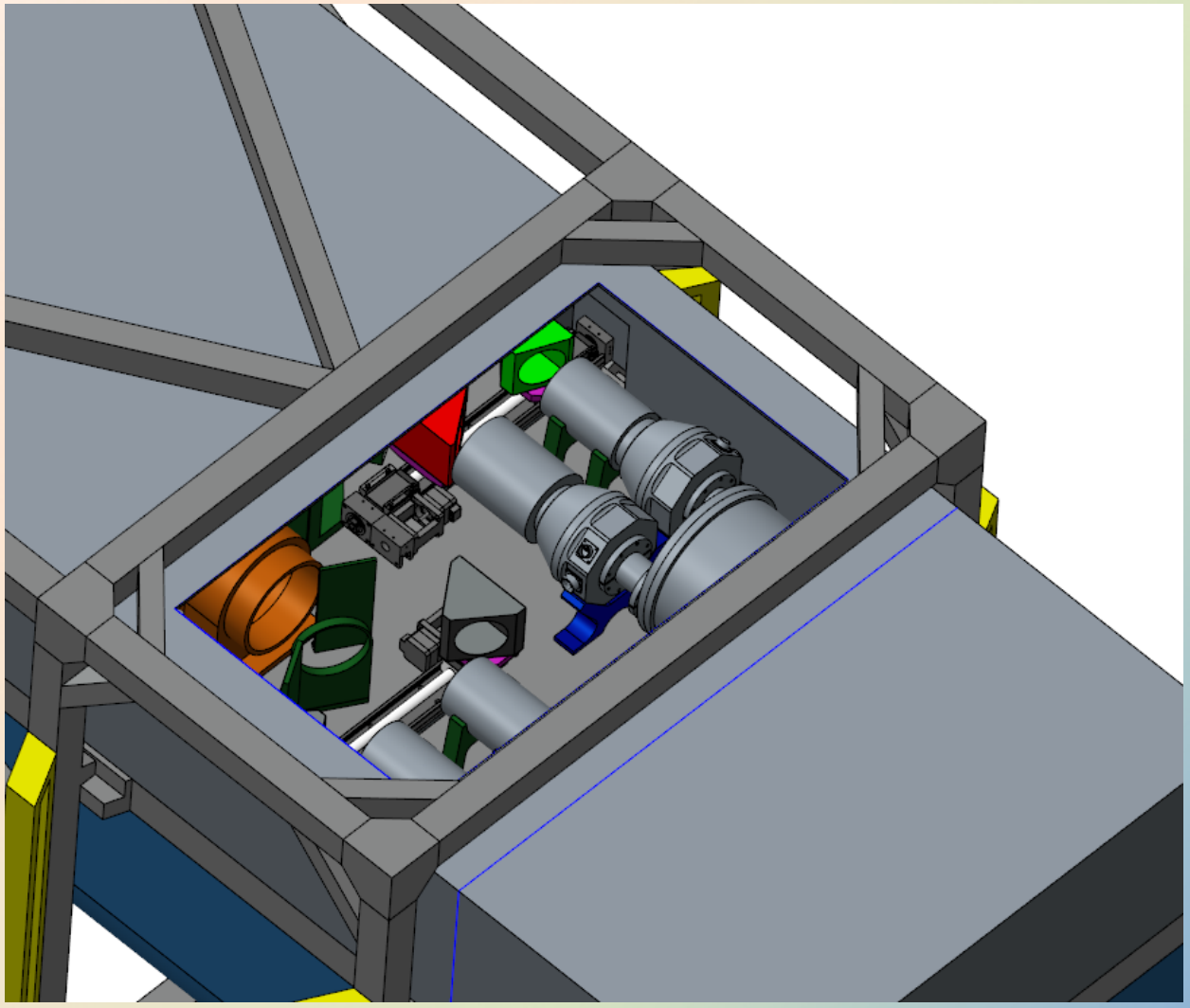

Focal plane

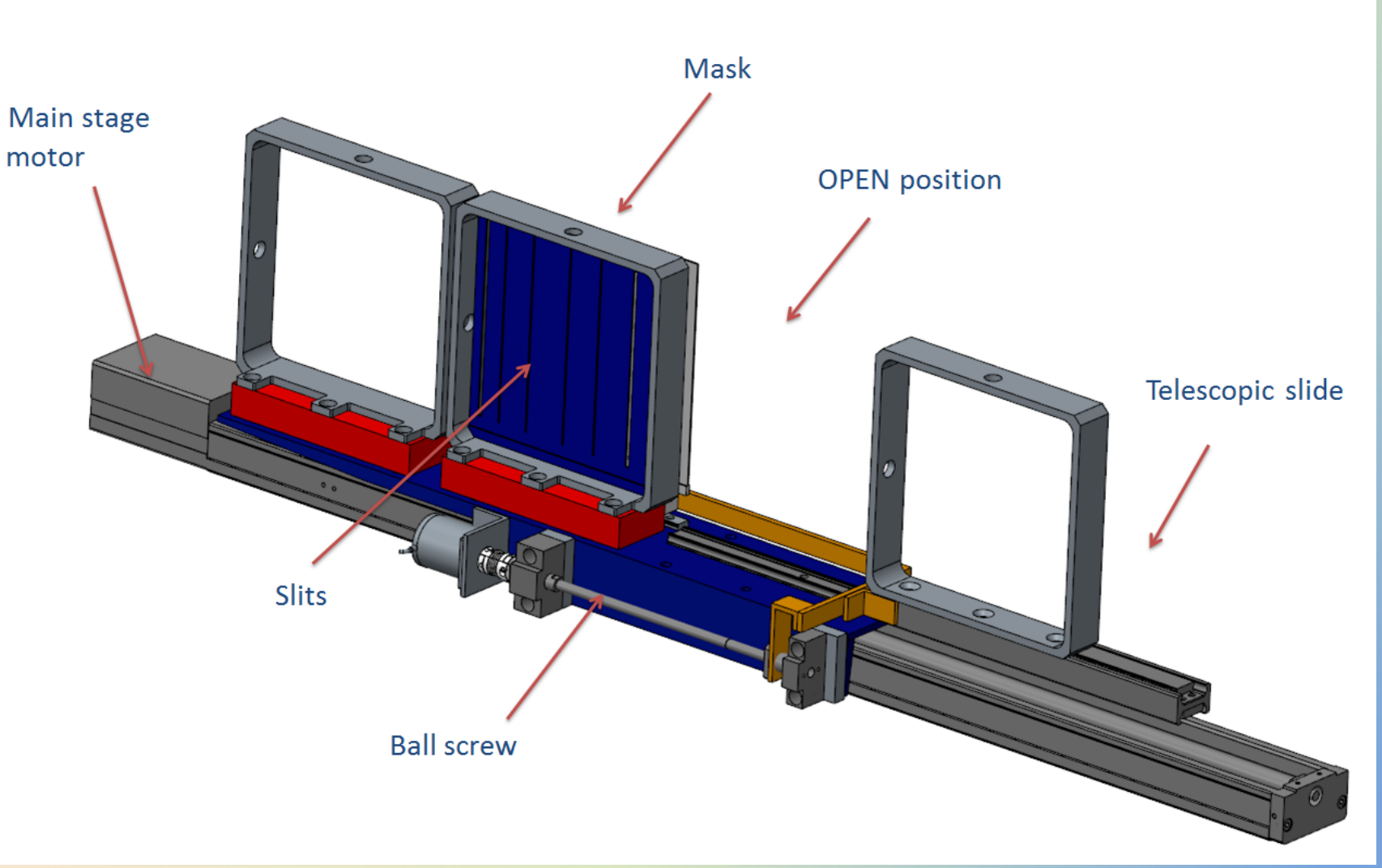
Mask
Main stage motor
OPEN position
Telescopic slide
Slits
Ball screw

Cryogenics

- Two helium closed-cycle cryocoolers

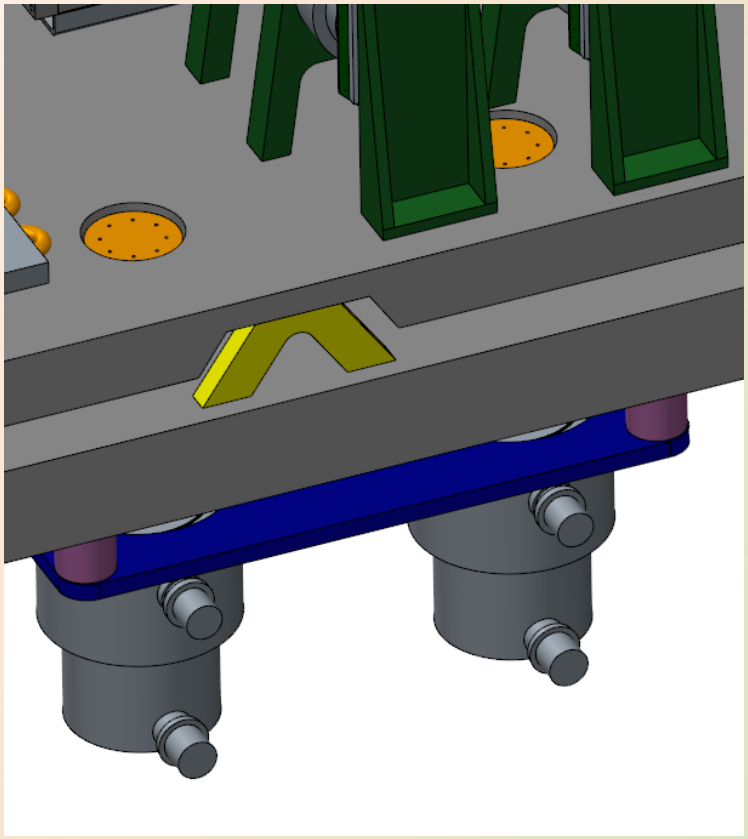

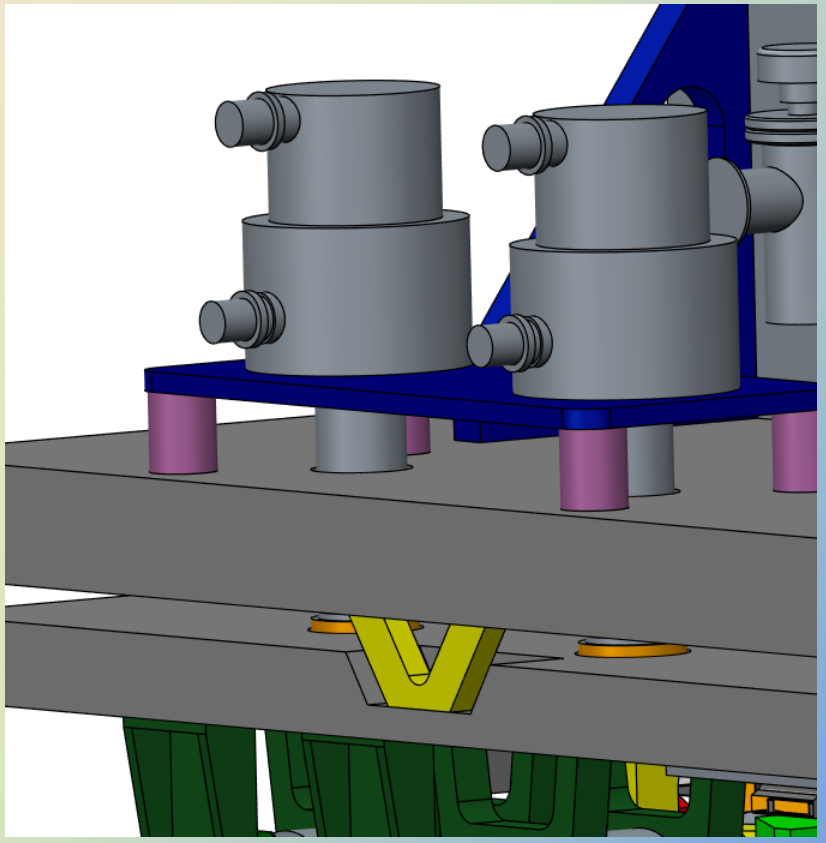

VIS Detectors

- e2v CCD231-42 2kx1k frame transfer
- Readouts as fast as 93 ms
- Development being done by Vik Dhillon with e2V for Hipercam
- Equivalent 4kx1k CCD used for the g-band
- Cryocooler as base design, thermoelectric alternative being tested

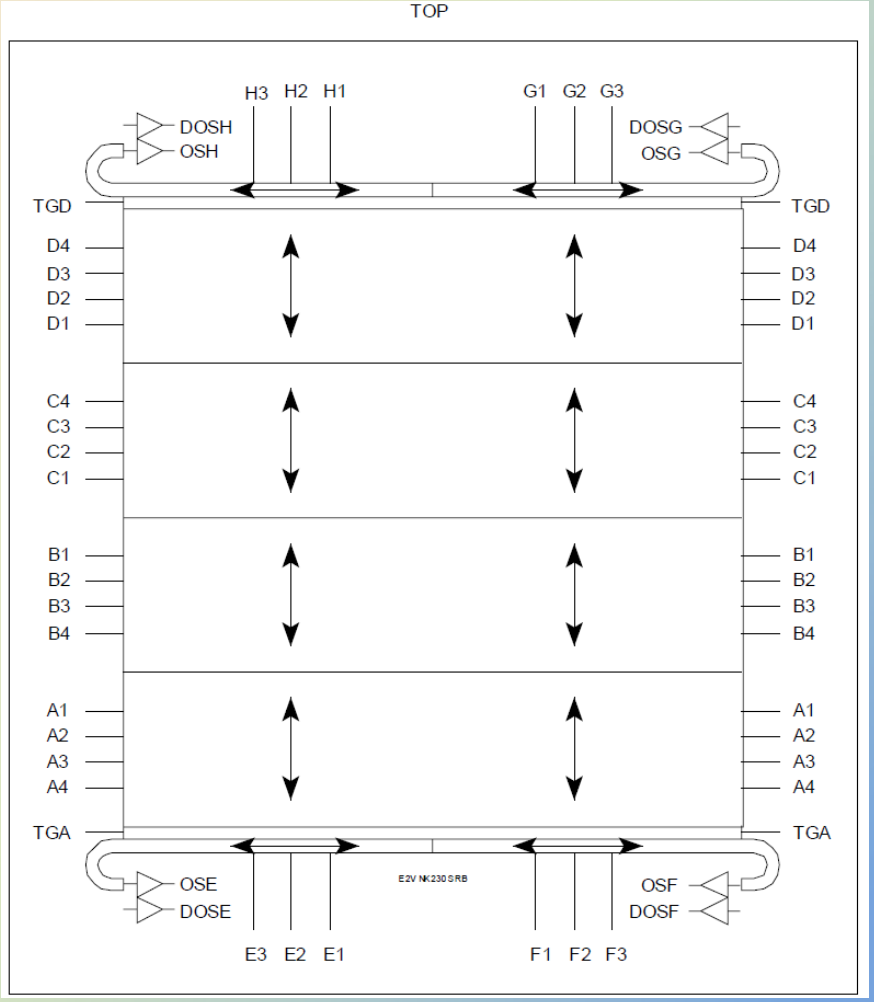

VIS Detectors

- e2v CCD231-42 2kx1k frame transfer
- Readouts as fast as 93 ms
- Development being done by Vik Dhillon with e2V for Hipercam
- Equivalent 4kx1k CCD used for the g-band
- Cryocooler as base design, thermoelectric alternative being tested

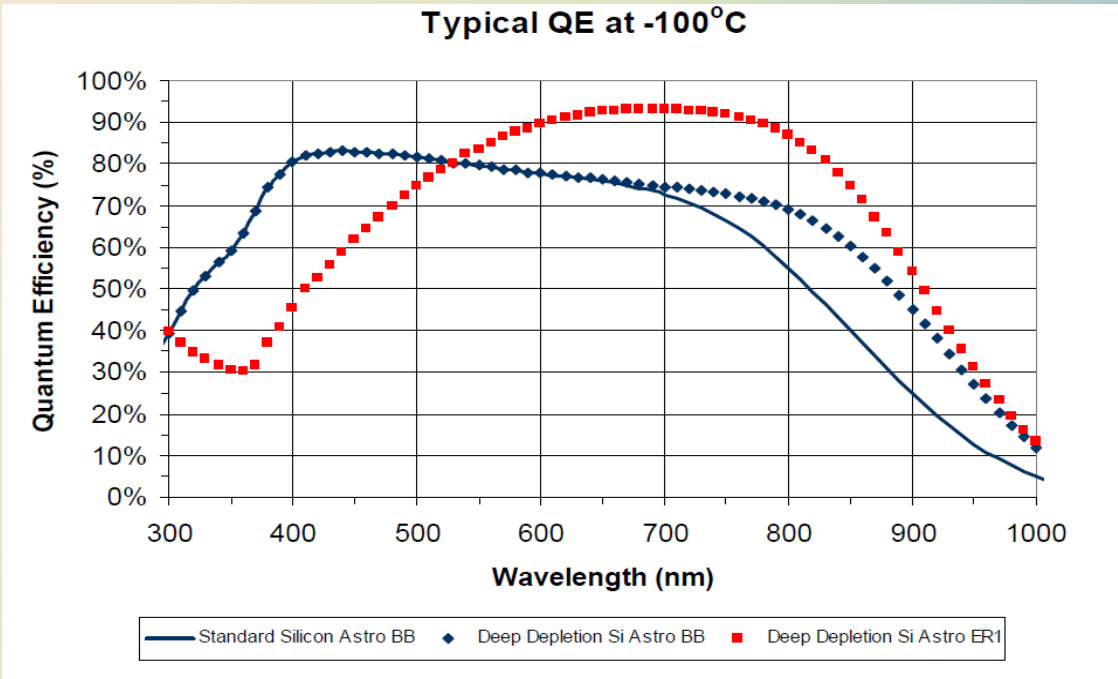

VIS Detectors

- e2v CCD231-42 2kx1k frame transfer
- Readouts as fast as 93 ms
- Development being done by Vik Dhillon with e2V for Hipercam
- Equivalent 4kx1k CCD used for the g-band
- Cryocooler as base design, thermoelectric alternative being tested

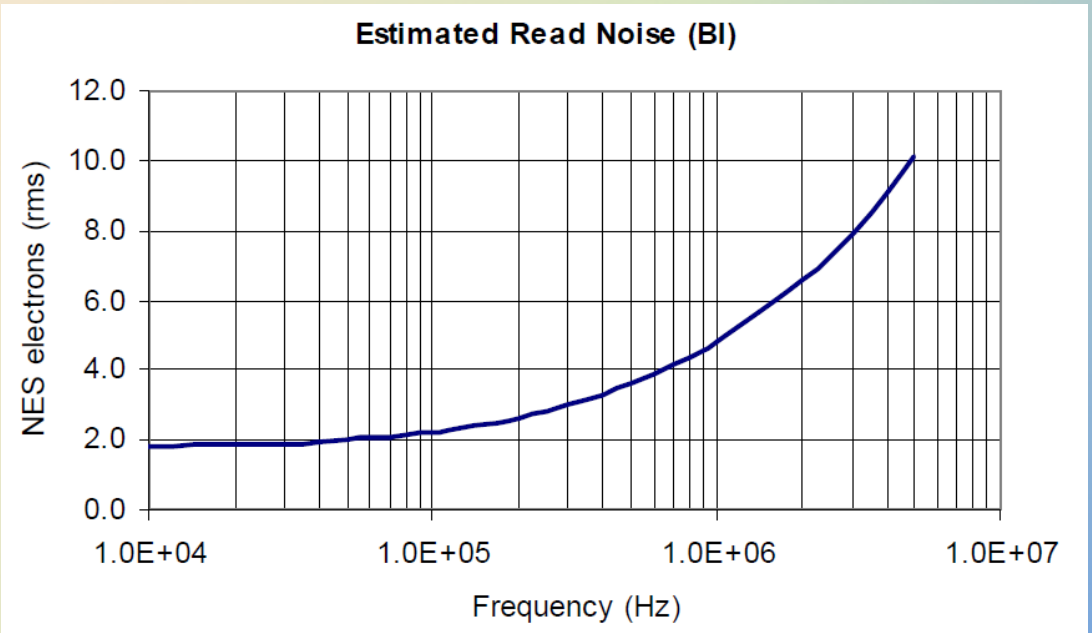

VIS Detectors

- e2v CCD231-42 2kx1k frame transfer
- Readouts as fast as 93 ms
- Development being done by Vik Dhillon with e2V for Hipercam
- Equivalent 4kx1k CCD used for the g-band
- Cryocooler as base design, thermoelectric alternative being tested

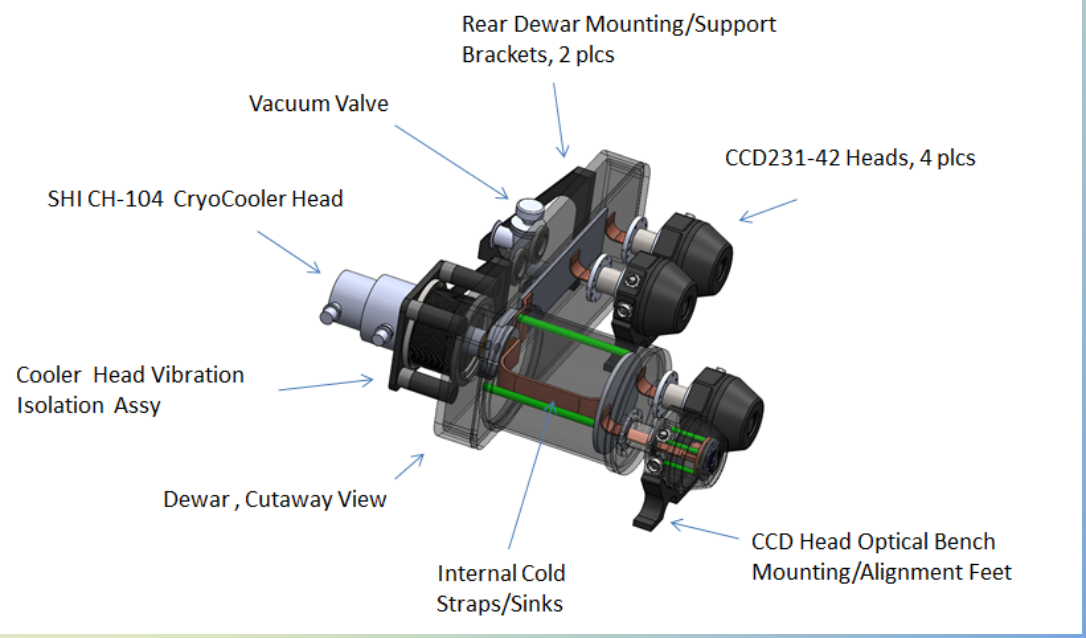

VIS Detectors

- e2v CCD231-42 2kx1k frame transfer
- Readouts as fast as 93 ms
- Development being done by Vik Dhillon with e2V for Hipercam
- Equivalent 4kx1k CCD used for the g-band
- Cryocooler as base design, thermoelectric alternative being tested

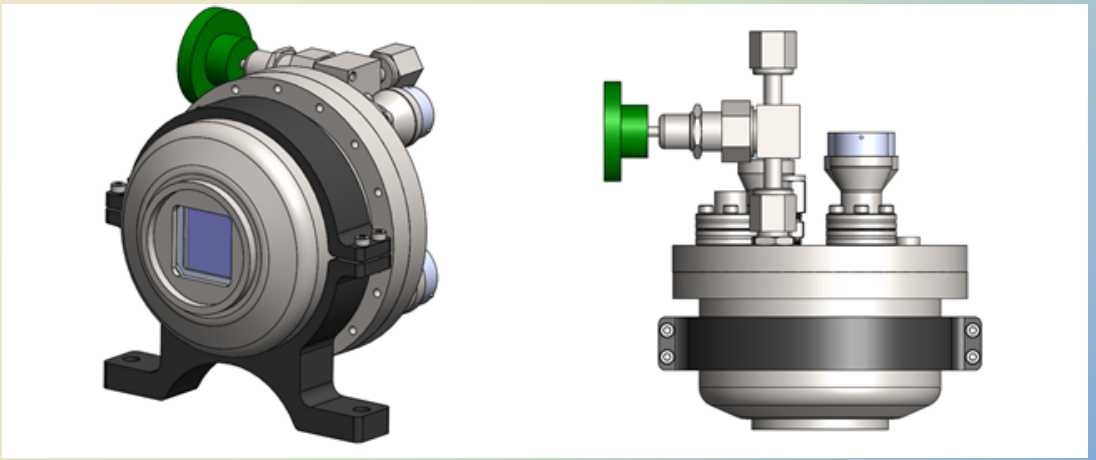

NIR Detectors

- Teledyne Hawaii 2RG 2kx2k detectors
- SIDECAR ASIC

Parameter	Unit	Specification	Goal	Measured
Power Dissipation	mW	≤ 1.0	≤ 0.5	0.297
Cutoff wavelength @ 120 K (50% of peak QE)	µm	1.65 - 1.80	1.70 - 1.75	1.72
Quantum Efficiency (QE) at 800 nm	%	≥ 50	≥ 70	58
Quantum Efficiency (QE) at 1000 nm	%	≥ 50	≥ 70	57
Quantum Efficiency (QE) at 1230 nm	%	≥ 70	≥ 80	73
Quantum Efficiency (QE) at 1500 nm	%	≥ 70	≥ 80	86
Median Dark current @ 0.25 V bias and 120 K	e-/s	≤ 0.05	≤ 0.01	0.001
Median Read Noise (single CDS)	e-	≤ 30	≤ 15	18.92
Well Capacity at 0.25 V bias	e-	≥ 80,000	≥ 100,000	95,563
Crosstalk	%	≤ 2	≤ 1	0.9
Operability	%	≥ 95	≥ 99	98.32
Cluster: 50 or more contiguous inoperable pixel	%	≤ 1% of array	≤ 0.5% of array	0.01

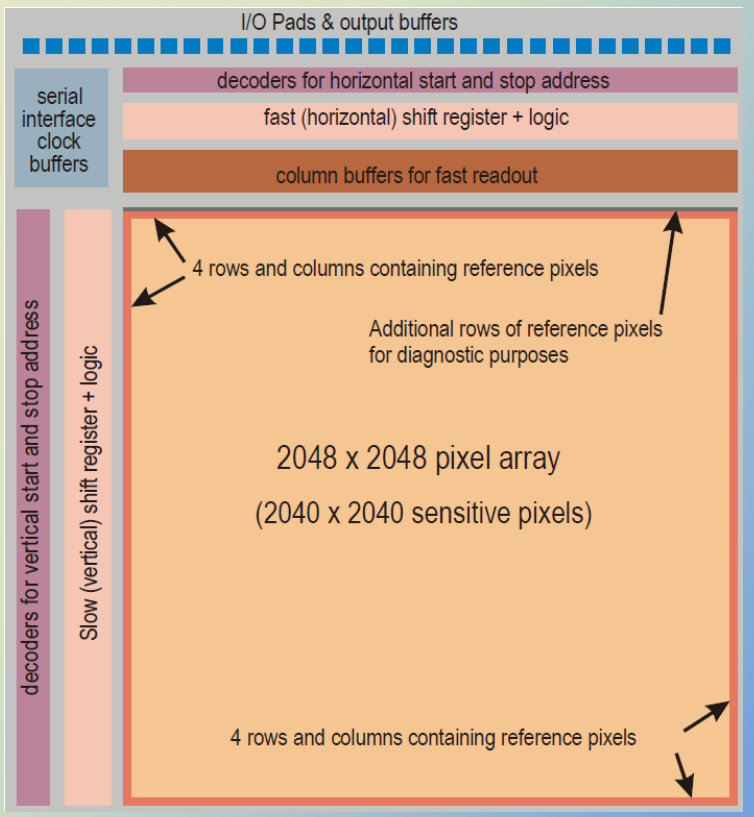

Detector performance in Imaging

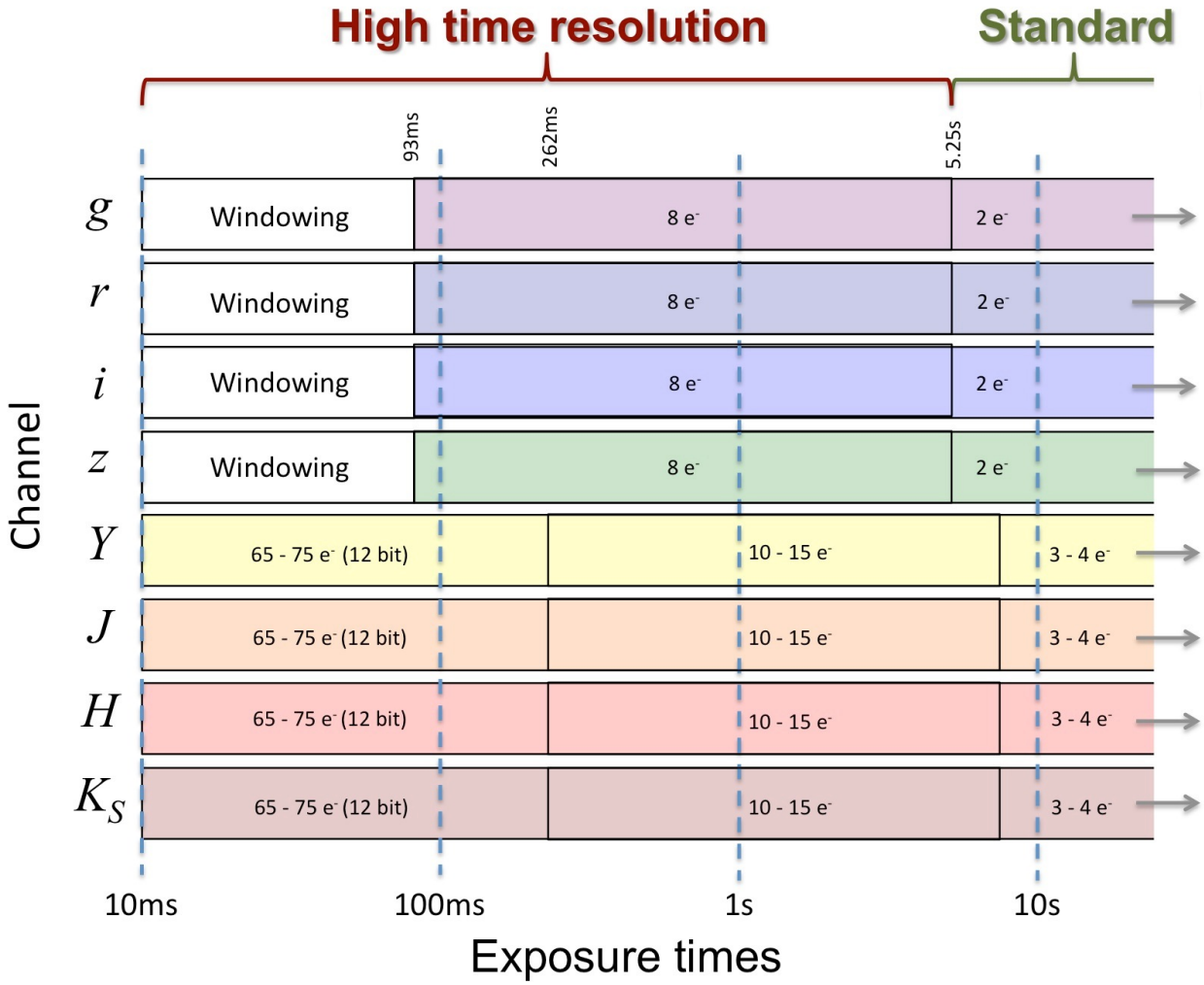

Detector performance in Spectroscopy

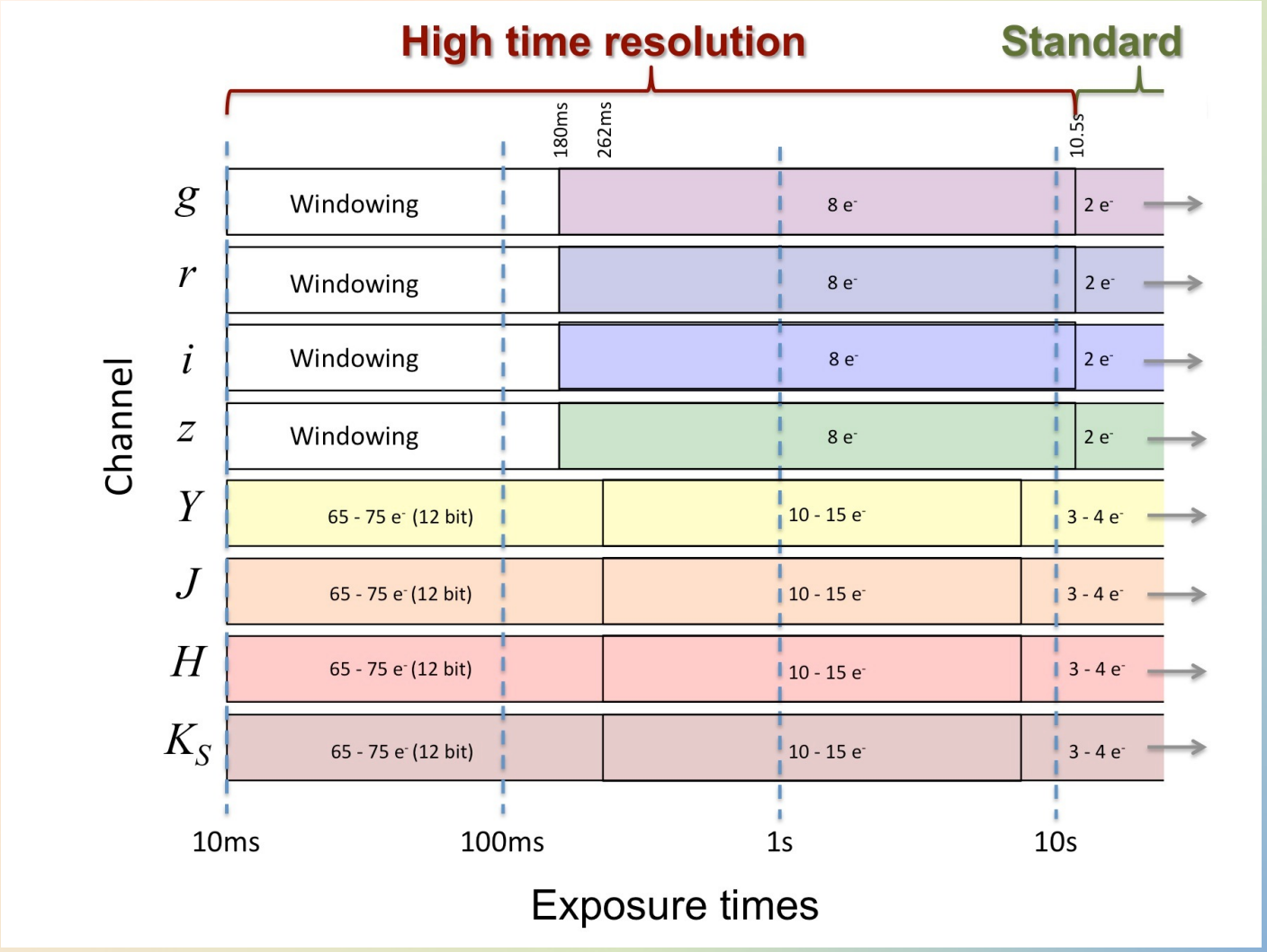

Integral Field Unit

- Unique wide band IFU
- Advanced Image Slicer
- 9.7”x6.8” with 17 x 0.4” slices
- Delivers full resolution with any seeing
- Alternatives:
  - Maximum field IFU 12”x16” with 10 x 1.2” slices
  - AO IFU: 2.5”x3.6” with 31 x 0.08” slices

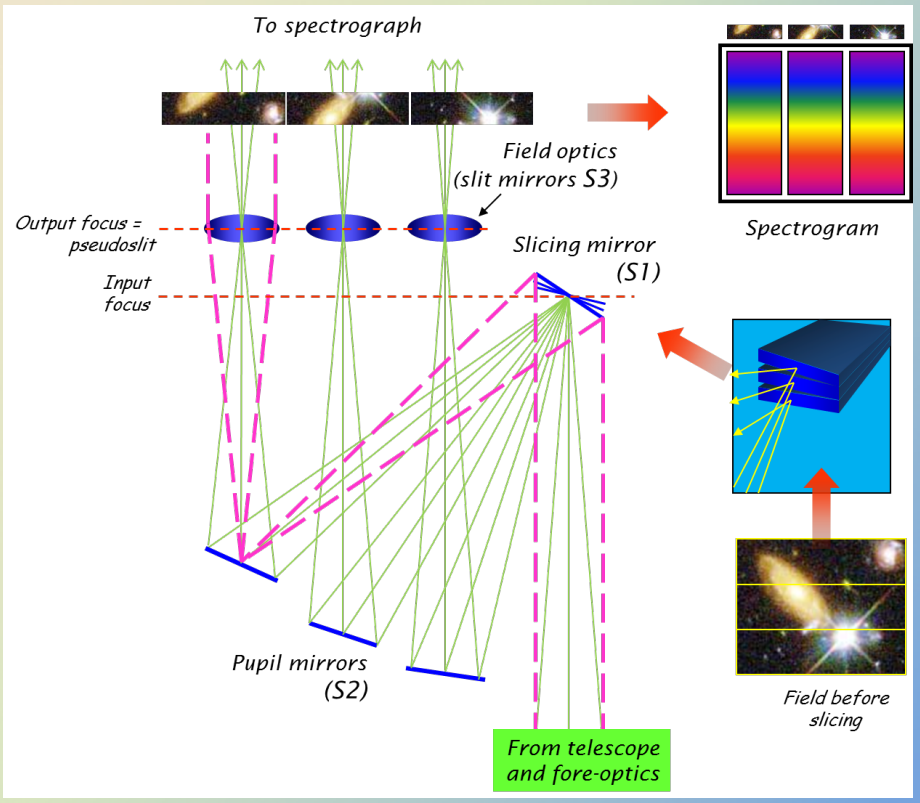

Integral Field Unit

- Unique wide band IFU
- Advanced Image Slicer
- 9.7”x6.8” with 17 x 0.4” slices
- Delivers full resolution with any seeing
- Alternatives:
  - Maximum field IFU 12”x16” with 10 x 1.2” slices
  - AO IFU: 2.5”x3.6” with 31 x 0.08” slices

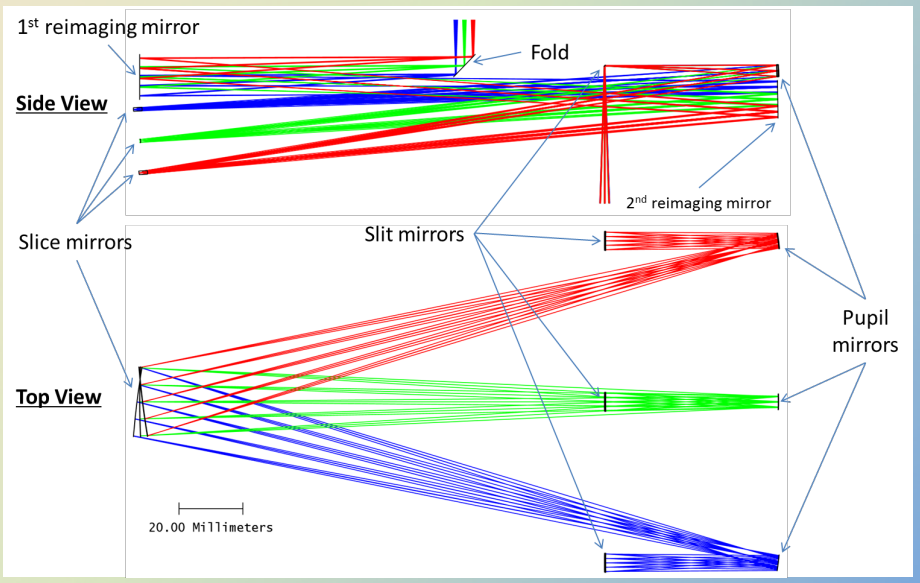

Integral Field Unit

- Unique wide band IFU
- Advanced Image Slicer
- 9.7”x6.8” with 17 x 0.4” slices
- Delivers full resolution with any seeing
- Alternatives:
  - Maximum field IFU 12”x16” with 10 x 1.2” slices
  - AO IFU: 2.5”x3.6” with 31 x 0.08” slices

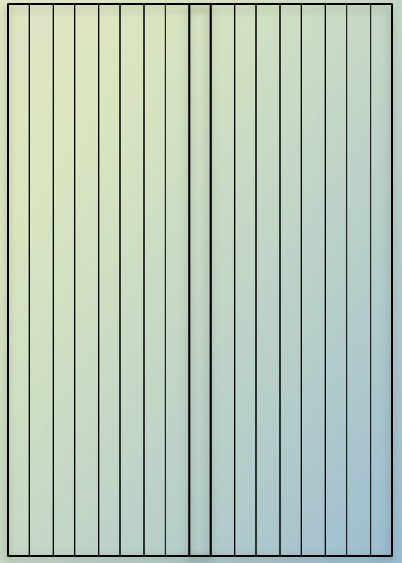

9.7”x6.8”

Integral Field Unit

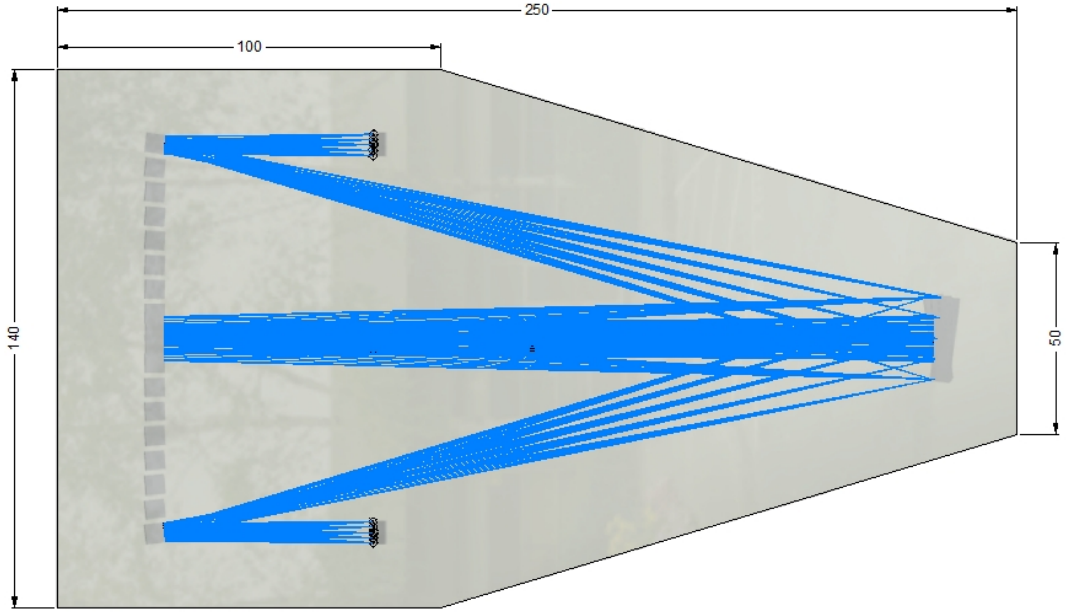

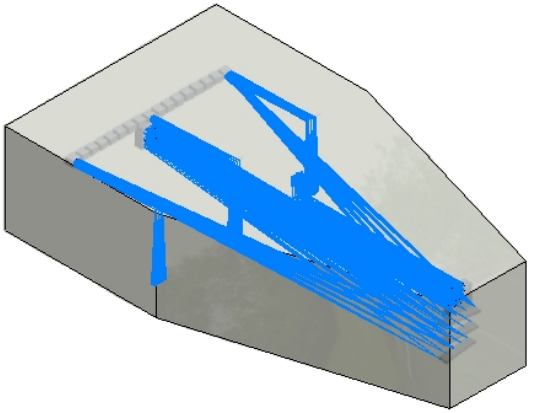

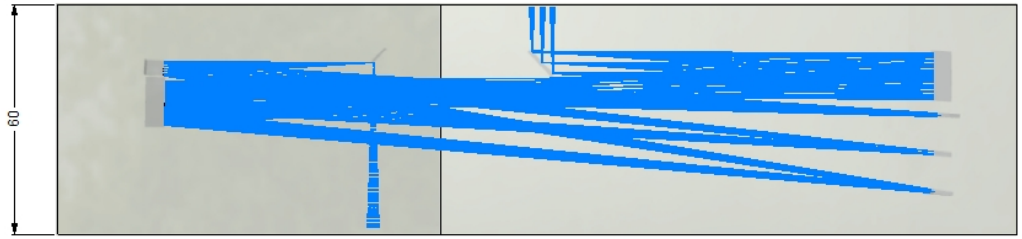

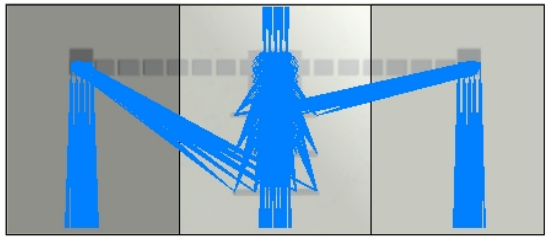

Integral Field Unit

- Unique wide band IFU
- Advanced Image Slicer
- 9.7”x6.8” with 17 x 0.4” slices
- Delivers full resolution with any seeing
- Alternatives:
  - Maximum field IFU 12”x16” with 10 x 1.2” slices
  - AO IFU: 2.5”x3.6” with 31 x 0.08” slices

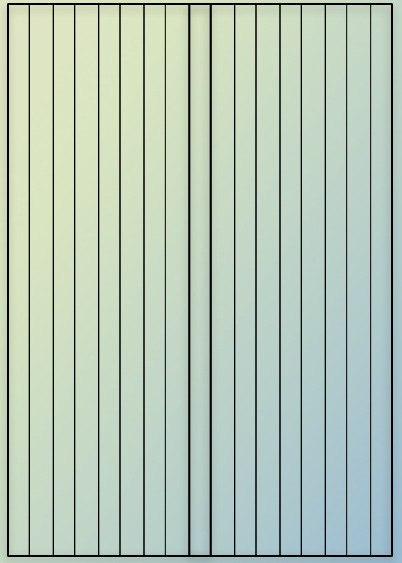

9.7”x6.8”

Spectropolarimeter

- Polychromatic modulator + Savart plate
- Efficient from 3700 to 22000 Å
- High-speed polarimetry possible for the continuum

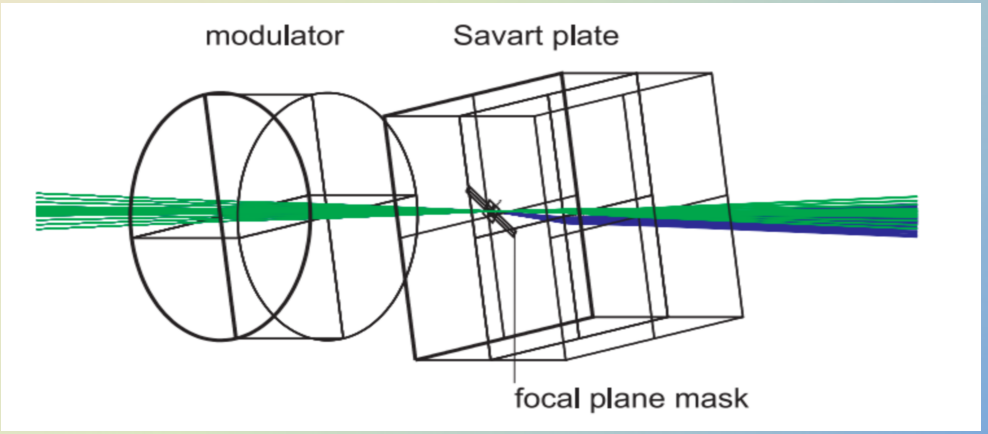

Spectropolarimeter

- Polychromatic modulator + Savart plate
- Efficient from 3700 to 22000 Å
- High-speed polarimetry possible for the continuum

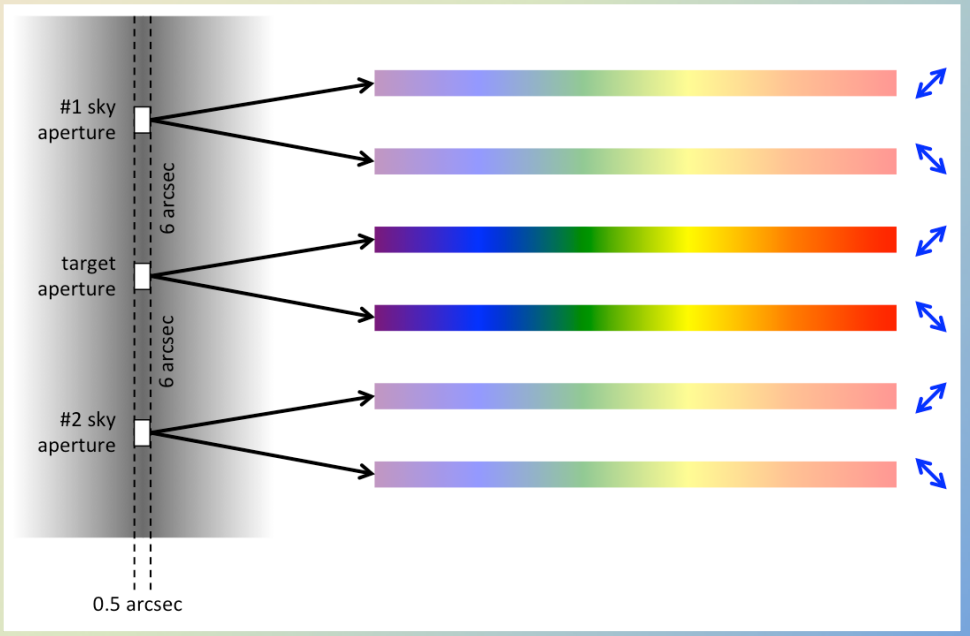

Spectropolarimeter

- Polychromatic modulator + Savart plate
- Efficient from 3700 to 22000 Å
- High-speed polarimetry possible for the continuum

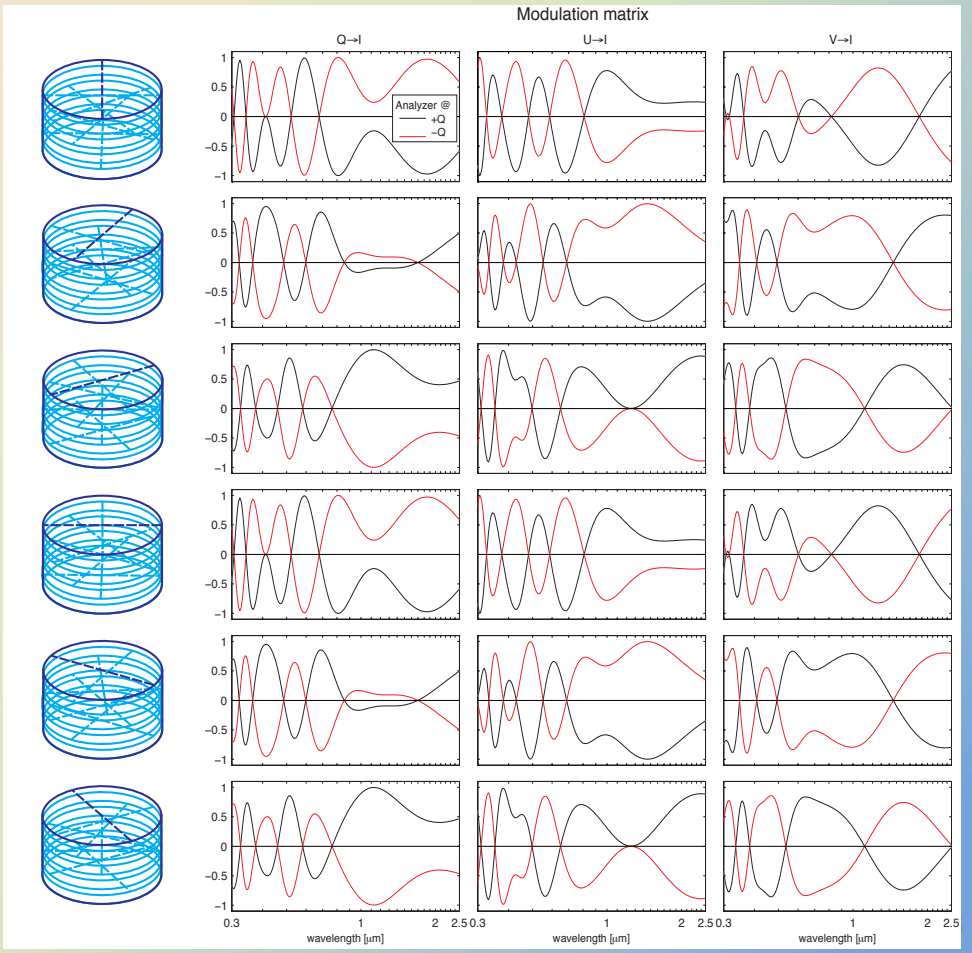

Instrument performance

Band	Minimum wavelength	Central wavelength	Maximum wavelength	Spectral coverage	Spectral resolution
g	370	460	550	180	3489
r	550	615	680	130	3229
i	680	745	800	130	3820
z	800	875	950	150	3885
Y	950	1035	1120	170	4156
J	1150	1250	1350	200	4267
H	1500	1630	1760	260	4280
K	2000	2175	2350	350	4242

Instrument performance

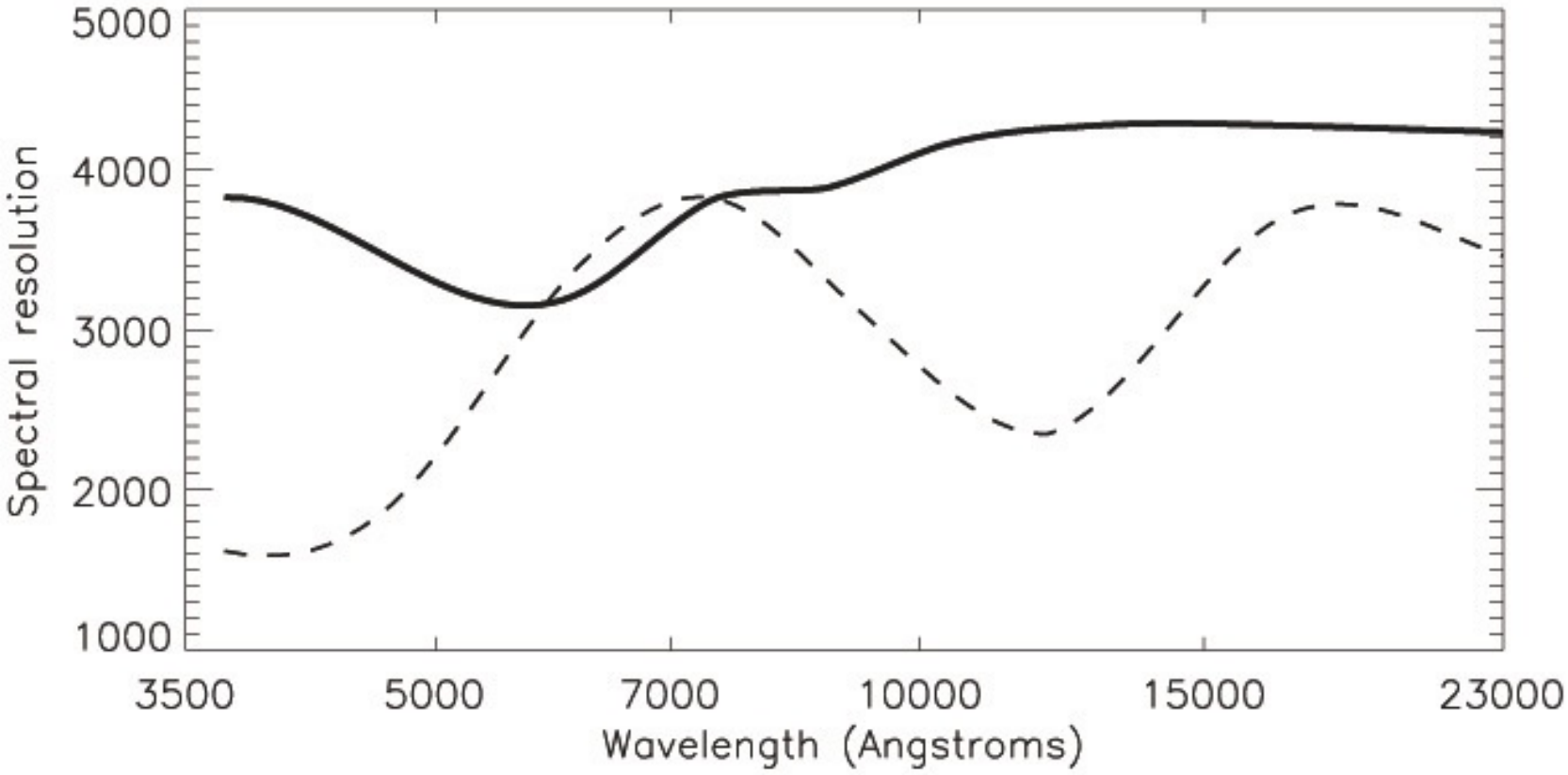

Instrument performance

Imaging								
Band	g	r	i	z	Y	J	H	K_S
Telescope	0.73	0.85	0.89	0.92	0.93	0.94	0.95	0.96
Optics	0.48	0.52	0.54	0.52	0.51	0.51	0.49	0.37
Detectors	0.83	0.91	0.92	0.66	0.85	0.83	0.83	0.83
O+Det	0.40	0.47	0.50	0.34	0.43	0.42	0.41	0.31
Tel+O+Det	0.29	0.40	0.44	0.31	0.40	0.39	0.39	0.30

Spectroscopy								
Band	g	r	i	z	Y	J	H	K_S
Telescope	0.73	0.85	0.89	0.92	0.93	0.94	0.95	0.96
Optics	0.39	0.43	0.44	0.43	0.42	0.42	0.40	0.30
Detectors	0.83	0.91	0.92	0.66	0.85	0.83	0.83	0.83
O+Det	0.32	0.39	0.40	0.28	0.36	0.35	0.33	0.25
Tel+O+Det	0.23	0.33	0.36	0.26	0.33	0.33	0.31	0.24

Instrument performance

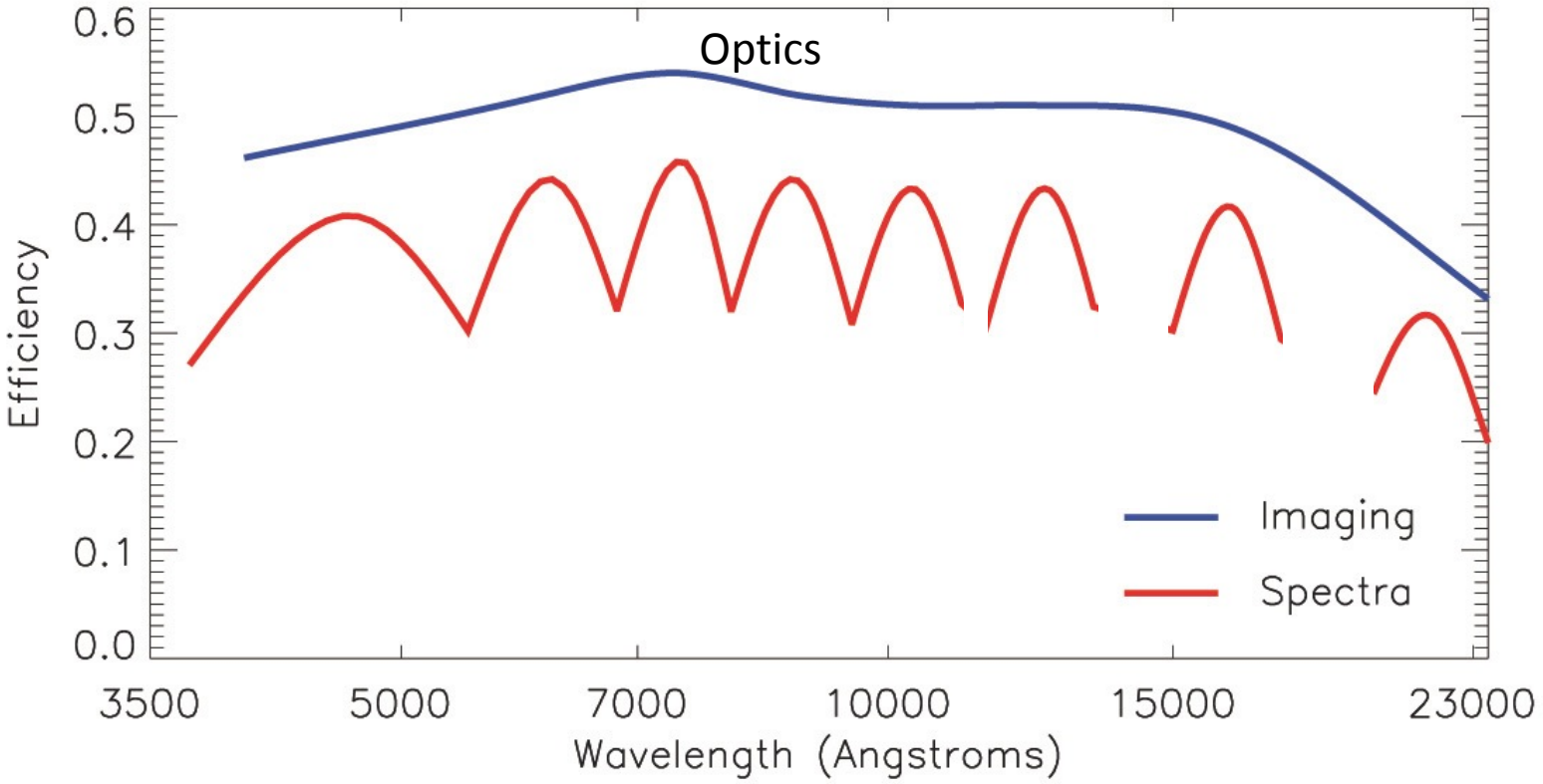

Instrument performance

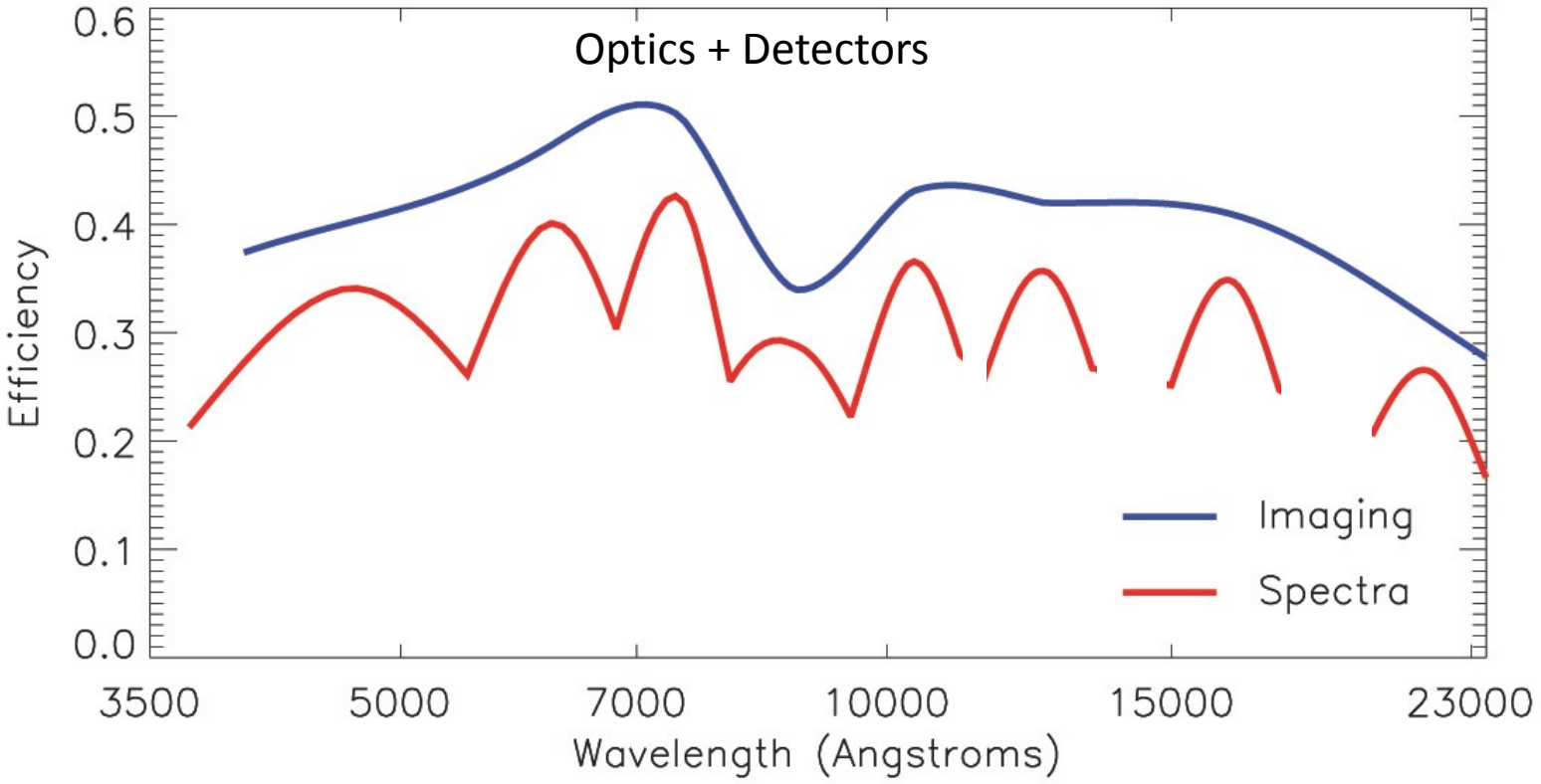

Instrument performance

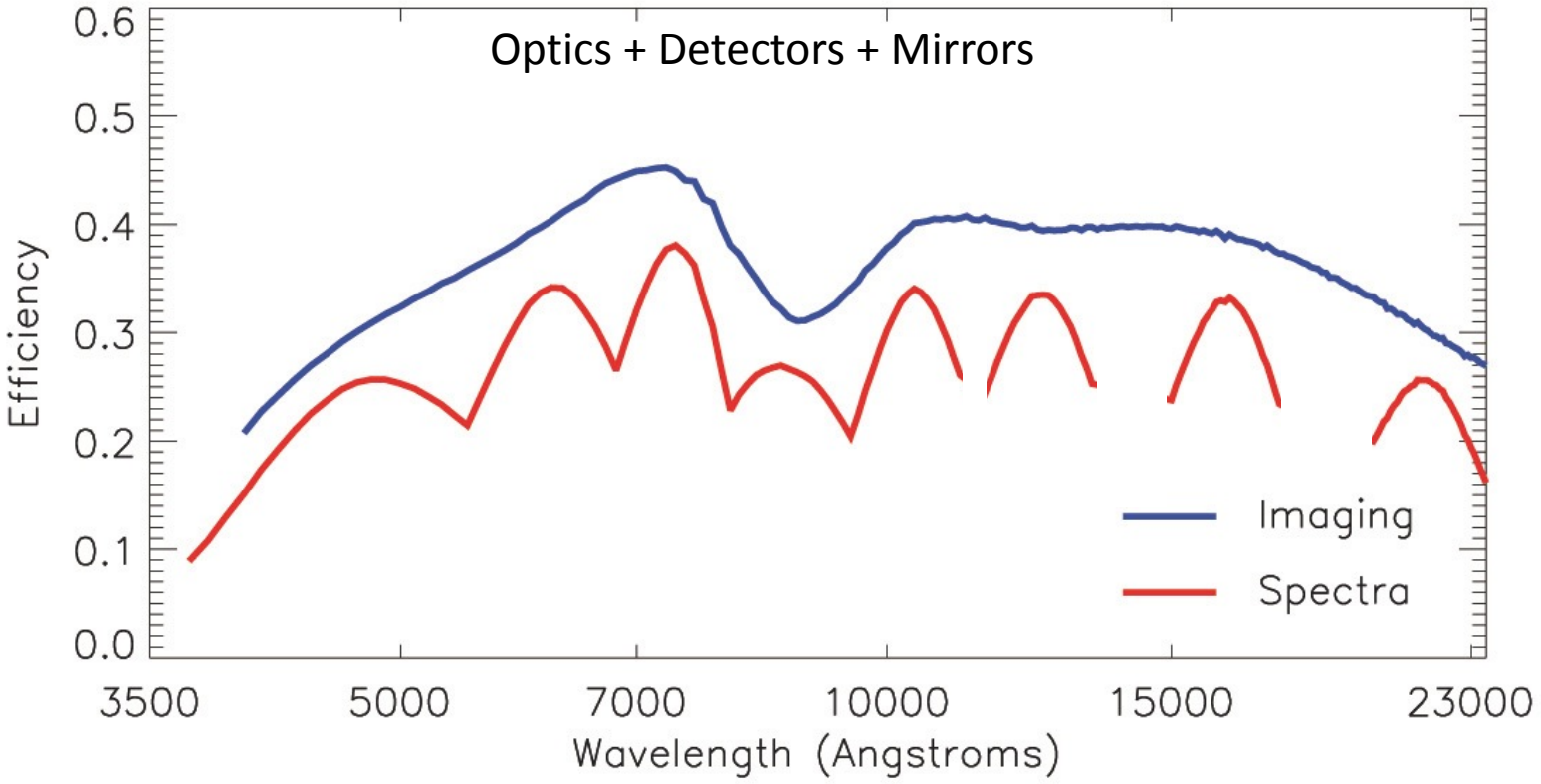

Instrument performance

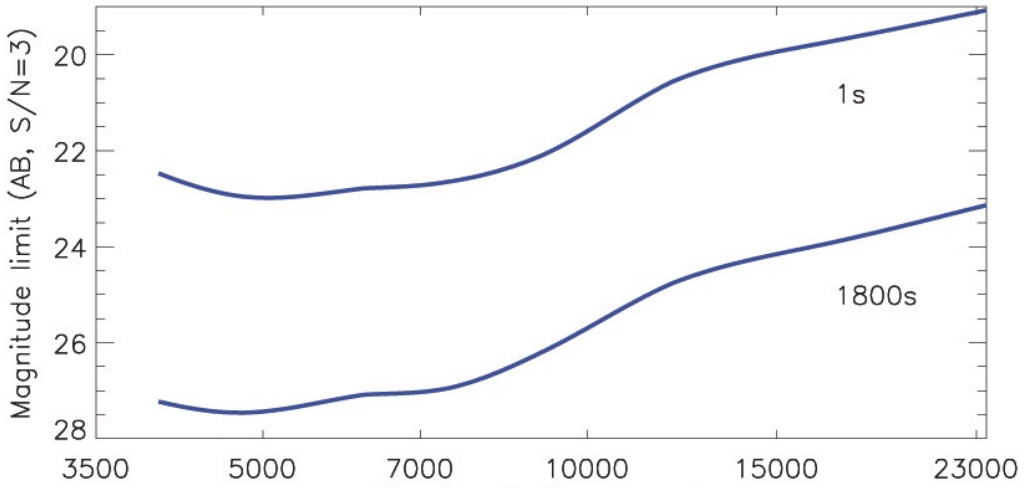

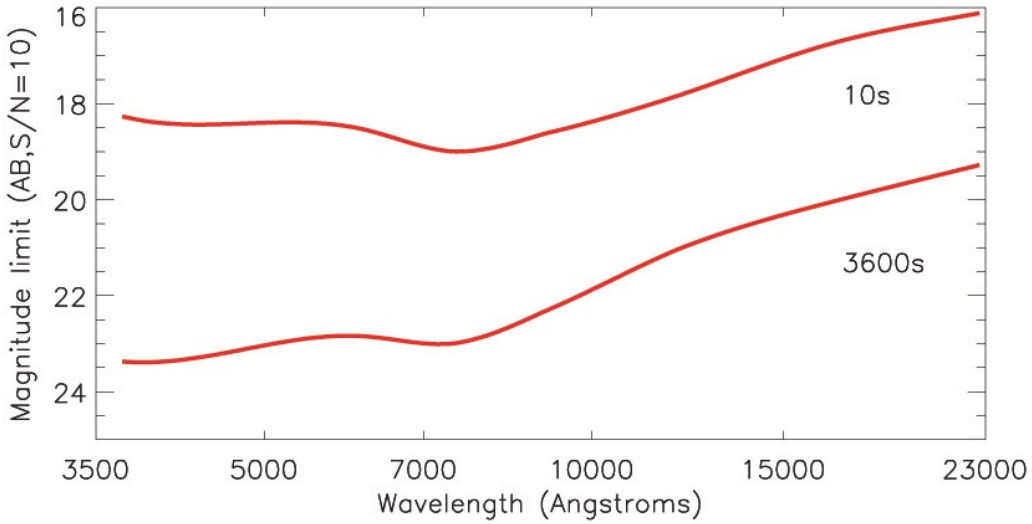

OCTOCAM

Thank you!

OCTOCAM Block Diagram

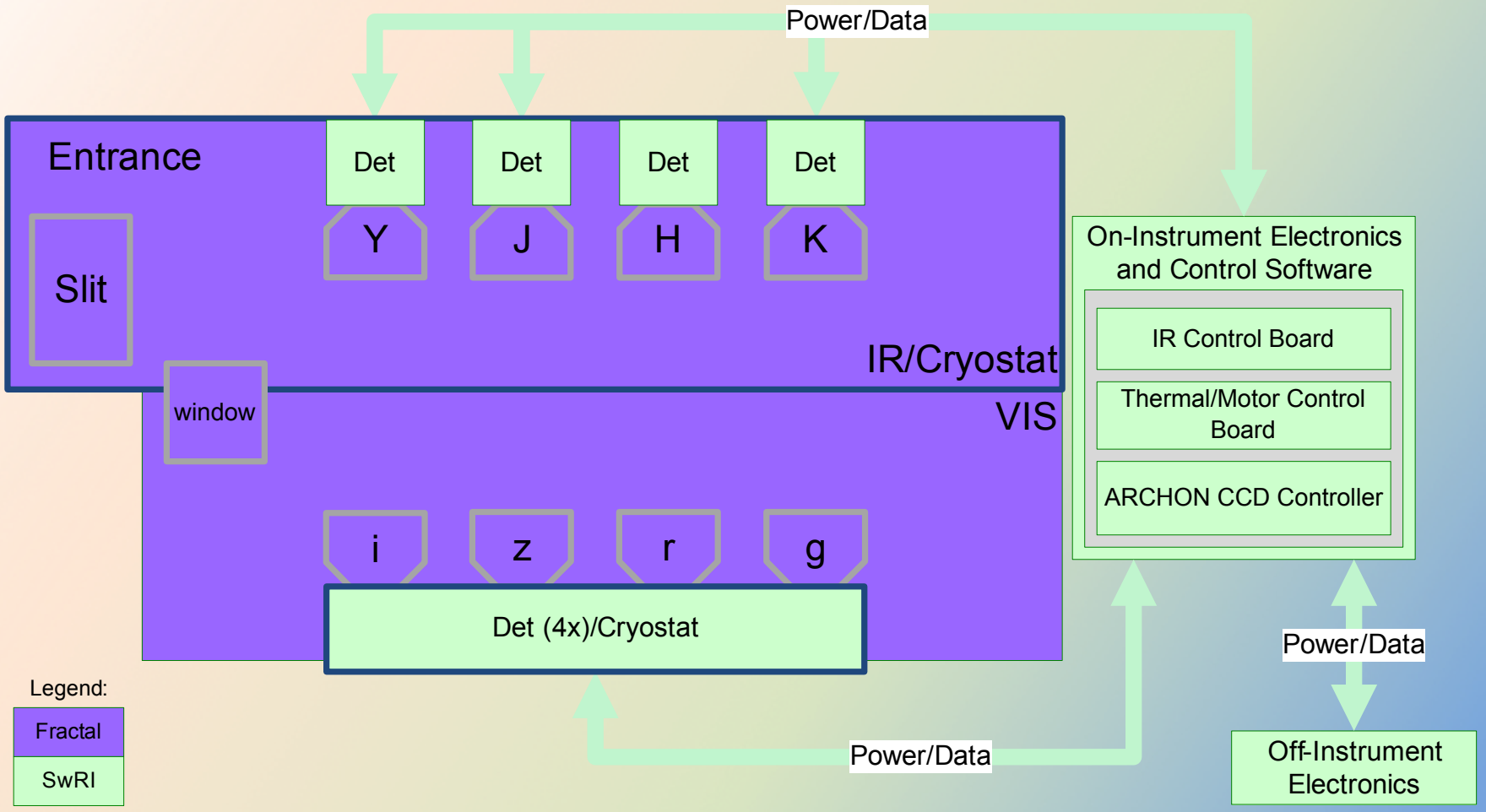

Electrical Block Diagram

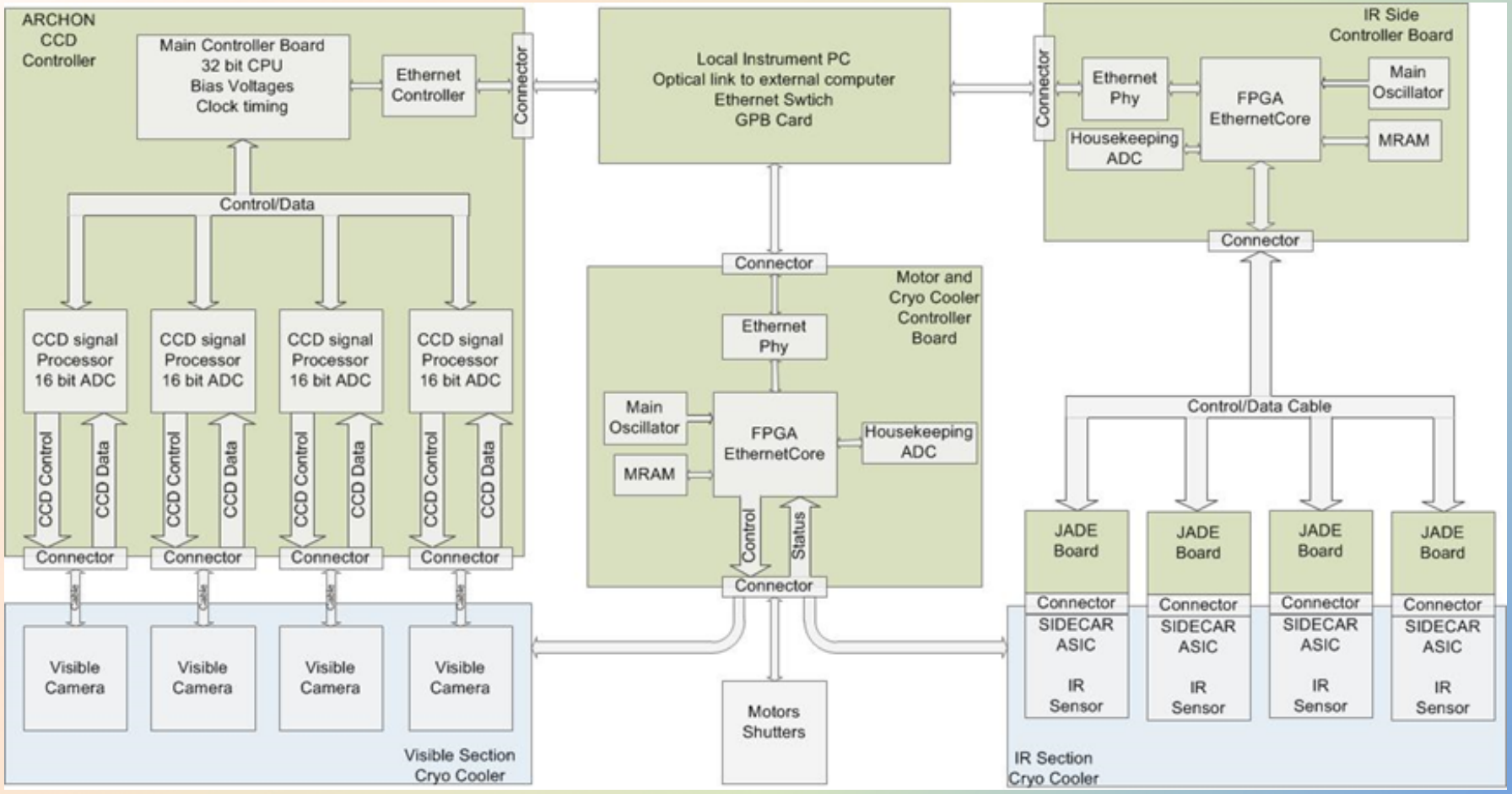

Software Block Diagram

